Tagra | Core | Connectable LED Festoon String | White | 40 Fixtures | IP44 | 500mm Spacing | 20M

FESTAW/40 / ITM002910



Datasheet

Tagra | Core | Connectable LED Festoon String | White | 40 Fixtures | IP44 | 500mm Spacing | 20M

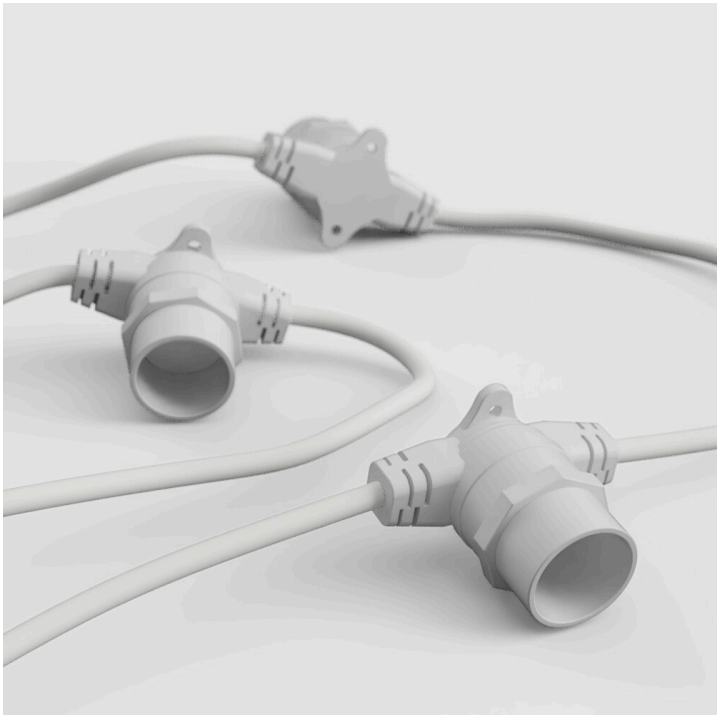

Bulb Cap	Colour	IP Rating	Material	Warranty
B22	White	IP44	PVC	1 Years

SKU: FESTAW/40
ITM: ITM002910

Key Features:

- **Body Colour:** White
- **Bulb Type:** B22
- **Bulb Spacing:** 500mm
- **Product Length:** 20m
- **Dimensions (wh):** 16 x 16 mm

Mechanical Data

Base Type:	Bayonet B22	**Body Colour:**	White
Bulb Spacing:	500mm	**Cable Sheath Material:**	Silicone
Cable Weight:	18AWG	**LED Chip Brand:**	Sanan
LED Chip Type:	SMD2835	**Product Weight:**	4363g
Product Height:	16mm	**Product Length:**	20000mm
Product Width:	16mm		

Electrical Data

Max Run Length:	20m

Input Data

Input Voltage:	220V - 240V

Control Data

Dimmable:	Yes

Photometric Data

Beam Angle:	120°	**CRI:**	90
Diffuser Colour:	Clear		

Environmental Data

Application Environment:	Covered Event Spaces, Residential Installations, Short terms outdoor Installations	**Body Material:**	PVC
Ingress Protection (IP):	IP44	**Saltwater Resistant:**	Yes
UV Resistant:	Yes	**Operating Temperature:**	-20°C - 45°C

Efficiency Data

Rated Life:	50000 Hours

Dimension Drawing

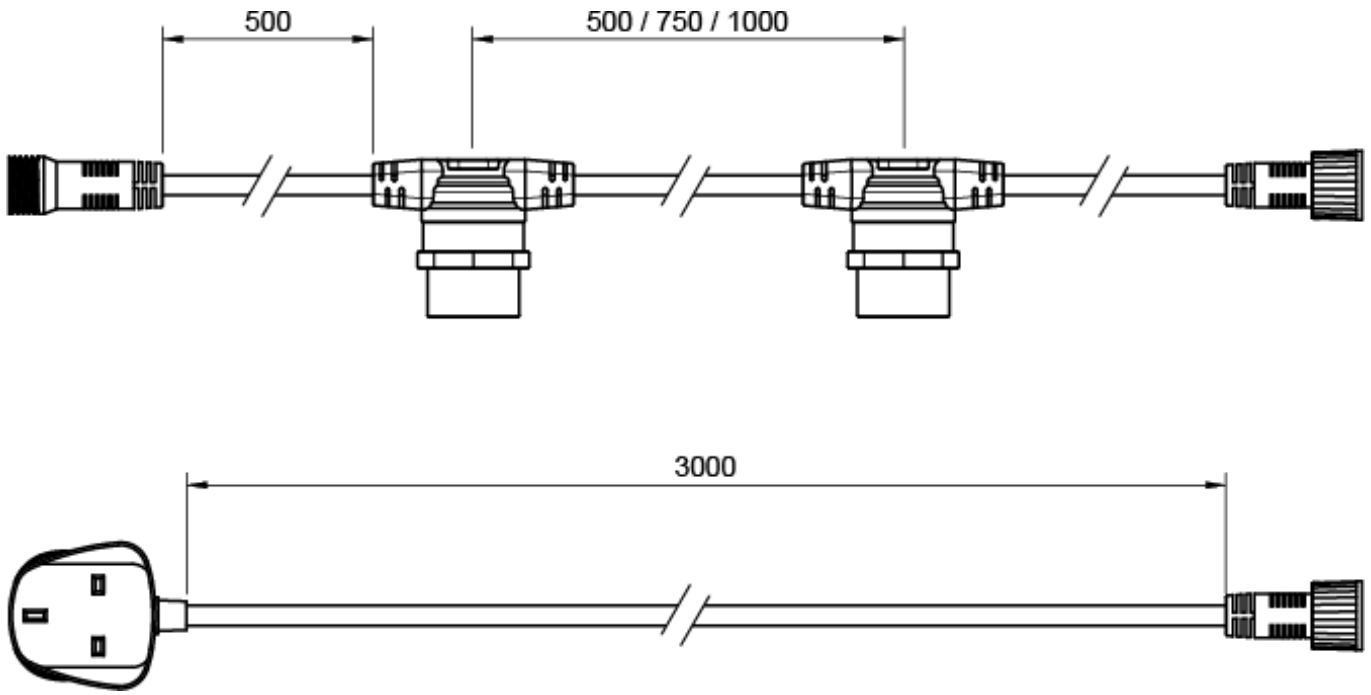

Packaging Data			
Packaging Height:	103mm	**Packaging Length:**	500mm
Packaging Width:	280mm	**Packaging Weight:**	4363g

Disclaimer

Tagra Lighting have taken reasonable care to ensure that the information in this datasheet is accurate at time of publication however it should be noted that all specifications are subject to tolerance. Descriptive specifications such as colour are subjective. Tagra Lighting reserve the right to update specifications without notice. The information in the datasheet may only be relied on by customers of Tagra Lighting in accordance with applicable terms and conditions.

Tagra Lighting is a trading name of T.R Ventures Limited, a company incorporated in England with registered number 07757720. Our registered office is Unit 2, Southfield Industrial Estate, Trafford Park, M17 1SJ.

www.tagra-lighting.co.uk