30W Ultra Slim Step Shape DIN Rail HDR-30 series

User's Manual



LPS UL508 UL62368-1 BS EN/EN61558 R33100 RoHS TPTC004 AS/NZS60950-1 IEC62368-1 ECO Household Automate Industrial Security Network Telecom

Features

- Ultra slim design with 35mm(2SU) width
- Universal input 85~264VAC(277VAC operational)
- No load power consumption<0.3W
- Isolation class Ⅱ
- Pass LPS (Limited power source)
- DC output voltage adjustable
- Protections : Short circuit / Overload / Over voltage
- Cooling by free air convection (working temperature:-30~+70°C)
- DIN rail TS-35/7.5 or 15 mountable
- LED indicator for power on
- 3 years warranty

Applications

- Household control system
- Building automation
- Industrial control system
- Factory automation
- Electro-mechanical apparatus

GTIN CODE

MW Search: https://www.meanwell.com/serviceGTIN.aspx

Description

HDR-30 is one economical ultra slim 30W DIN rail power supply series, adapt to be installed on TS-35/7.5 or TS-35/15 mounting rails. The body is designed 35mm(2SU) in width, which allows space saving inside the cabinets. The entire series adopts the full range AC input from 85VAC to 264VAC(277VAC operational) and conforms to BS EN/EN61000-3-2, the norm the European Union regulates for harmonic current.

HDR-30 is designed with plastic housing that it can effectively prevent user from electric hazards. With working efficiency up to 90%, the entire series can operate at the ambient temperature between -30℃ and 70℃ under air convection. The complete protection functions and relevant certificates for home automations and industrial control apparatus (IEC62368-1, UL508,UL62368-1, BS EN/EN61558-2-16) make HDR-30 a very competitive power supply solution for household and industrial applications.

Model Encoding

HDR - 30 - 12

- 12 → Output voltage
- 30 → Rated wattage
- HDR → Series name

SPECIFICATION

MODEL		HDR-30-5	HDR-30-12	HDR-30-15	HDR-30-24	HDR-30-48
OUTPUT	DC VOLTAGE	5V	12V	15V	24V	48V
	RATED CURRENT	3A	2A	2A	1.5A	0.75A
	CURRENT RANGE	0 ~ 3A	0 ~ 2A	0 ~ 2A	0 ~ 1.5A	0 ~ 0.75A
	RATED POWER	15W	24W	30W	36W	36W
	RIPPLE & NOISE (max.) Note.2	80mVp-p	120mVp-p	120mVp-p	150mVp-p	240mVp-p
	VOLTAGE ADJ. RANGE	4.5 ~ 5.5V	10.8 ~ 13.8V	13.5 ~ 18V	21.6 ~ 29V	43.2 ~ 55.2V
	VOLTAGE TOLERANCE Note.3	±2.0%	±1.0%	±1.0%	±1.0%	±1.0%
	LINE REGULATION	±1.0%	±1.0%	±1.0%	±1.0%	±1.0%
	LOAD REGULATION	±1.0%	±1.0%	±1.0%	±1.0%	±1.0%
	SETUP, RISE TIME	500ms, 50ms/230VAC 500ms, 50ms/115VAC at full load				
	HOLD UP TIME (Typ.)	30ms/230VAC 12ms/115VAC at full load				
INPUT	VOLTAGE RANGE	85 ~ 264VAC (277VAC operational) 120 ~ 370VDC (390VDC operational)				
	FREQUENCY RANGE	47 ~ 63Hz				
	EFFICIENCY (Typ.)	82%	88%	89%	89%	90%
	AC CURRENT (Typ.)	0.88A/115VAC 0.48A/230VAC				
	INRUSH CURRENT (Typ.)	COLD START 25A/115VAC 45A/230VAC				
PROTECTION	OVERLOAD	105 ~ 160% rated output power				
		Hiccup mode when output voltage <50%, recovers automatically after fault condition is removed				
		Constant current limiting within 50% ~100% rated output voltage, recovers automatically after fault condition is removed				
	OVER VOLTAGE	5.75 ~ 7.5V	15 ~ 18V	18.8 ~ 22.5V	30 ~ 36V	57.6~ 67.2V
		Protection type : Shut down o/p voltage, re-power on to recover				
ENVIRONMENT	WORKING TEMP.	-30 ~ +70℃ (Refer to "Derating Curve")				
	WORKING HUMIDITY	20 ~ 90% RH non-condensing				
	STORAGE TEMP., HUMIDITY	-40 ~ +85℃, 10 ~ 95% RH non-condensing				
	TEMP. COEFFICIENT	±0.03%/℃ (0 ~ 50℃) RH non-condensing				
	VIBRATION	10 ~ 500Hz, 2G 10min./1cycle, period for 60min. each along X, Y, Z axes; Mounting: Compliance to IEC60068-2-6				
	OPERATING ALTITUDE	2000 meters				
	OVER VOLTAGE CATEGORY	Ⅲ ; According to EN61558, EN50178,EN60664-1, EN62477-1 ; altitude up to 2000 meters				
SAFETY & EMC (Note 4)	SAFETY STANDARDS	UL62368-1, UL508, TUV BS EN/EN61558-2-16, BS EN/EN61558-1,IEC62368-1, EAC TP TC 004, BSMI CNS15598-1 approved; Design refer to TUV BS EN/EN62368-1				
	WITHSTAND VOLTAGE	I/P-O/P:4KVAC				
	ISOLATION RESISTANCE	I/P-O/P:100M Ohms / 500VDC / 25℃/ 70% RH				
	EMC EMISSION	**Parameter**	**Standard**	**Test Level / Note**		
		Conducted	BS EN/EN55032(CISPR32), CNS15936	Class B		
		Radiated	BS EN/EN55032(CISPR32), CNS15936	Class B		
		Harmonic Current	BS EN/EN61000-3-2	Class A		
		Voltage Flicker	BS EN/EN61000-3-3	-------		
	EMC IMMUNITY	BS EN/EN55035, BS EN/EN61000-6-2, BS EN/EN61204-3				
		Parameter	**Standard**	**Test Level /Note**		
		ESD	BS EN/EN61000-4-2	Level 3, 8KV air; Level 2, 4KV contact, criteria A		
		Radiated Susceptibility	BS EN/EN61000-4-3	Level 3, criteria A		
		EFT/Burest	BS EN/EN61000-4-4	Level 3, criteria A		
		Surge	BS EN/EN61000-4-5	Level 4,2KV/L-N, criteria A		
		Conducted	BS EN/EN61000-4-6	Level 3, criteria A		
		Magnetic Field	BS EN/EN61000-4-8	Level 4, criteria A		
		Voltage Dips and interruptions	BS EN/EN61000-4-11	＞95% dip 0. 5 periods, 30% dip 25 periods, ＞95% interruptions 250 periods		
OTHERS	MTBF	3670.4K hrs min. Telcordia SR-332 (Bellcore) ; 968.1K hrs min. MIL-HDBK-217F (25℃)				
	DIMENSION	35*90*54.5mm (W*H*D)				
	PACKING	0.13Kg;96pcs/14.2Kg/1.04CUFT				

NOTE

1. All parameters NOT specially mentioned are measured at 230VAC input, rated load and 25℃ of ambient temperature.
2. Ripple & noise are measured at 20MHz of bandwidth by using a 12" twisted pair-wire terminated with a 0.1 μF & 47 μF parallel capacitor.
3. Tolerance : includes set up tolerance, line regulation and load regulation.
4. The power supply is considered as an independent unit, but the final equipment still need to re-confirm that the whole system complies with the EMC directives. For guidance on how to perform these EMC tests, please refer to “EMI testing of component power supplies.” (as available on https://www.meanwell.com//Upload/PDF/EMI_statement_en.pdf)
5. The ambient temperature derating of 3.5℃/1000m with fanless models and of 5℃/1000m with fan models for operating altitude higher than 2000m(6500ft).

※ Product Liability Disclaimer : For detailed information, please refer to https://www.meanwell.com/serviceDisclaimer.aspx

■ Block Diagram

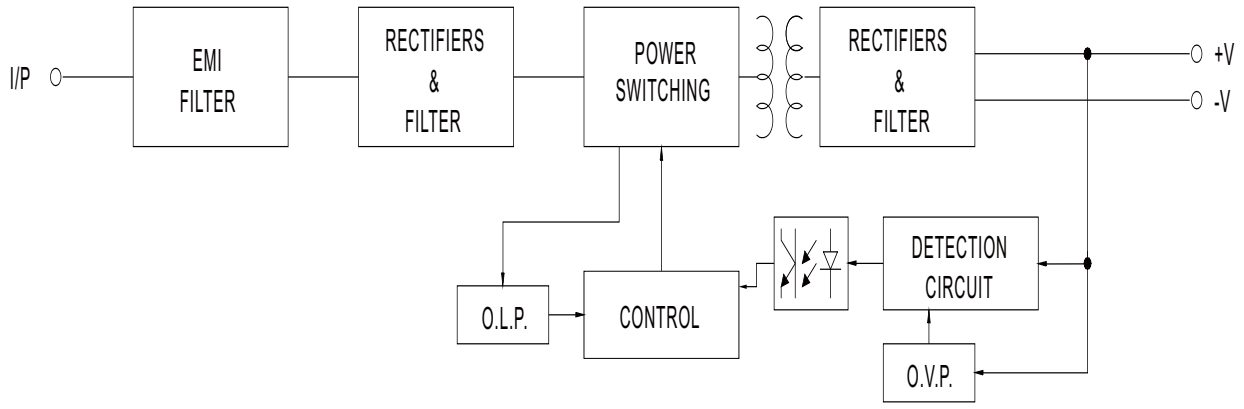

■ Derating Curve

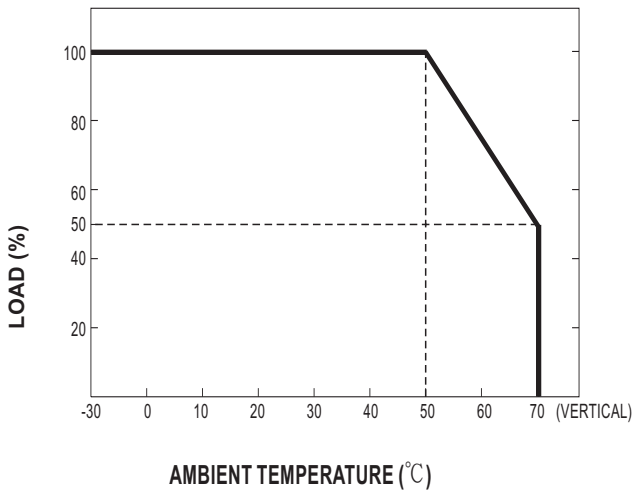

■ Output Derating VS Input Voltage

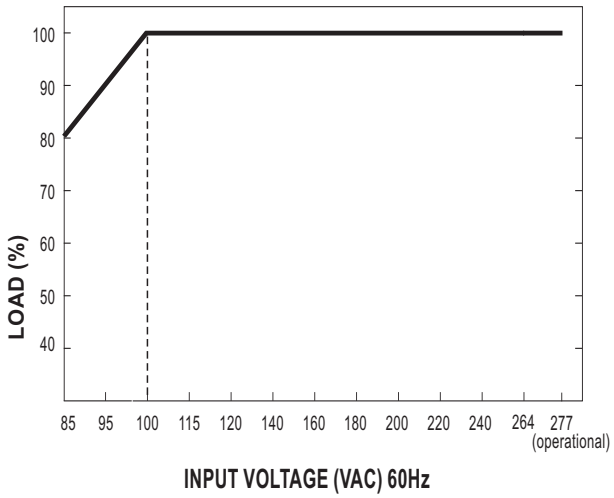

■ Mechanical Specification

（Unit: mm , tolerance ± 0.5mm)

Case No.HDR-30

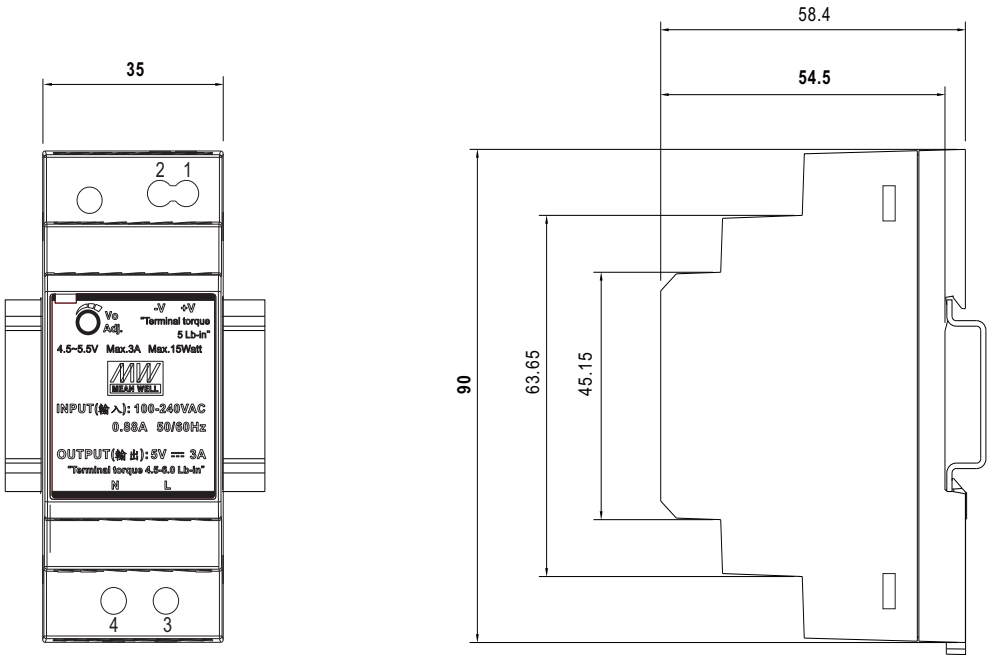

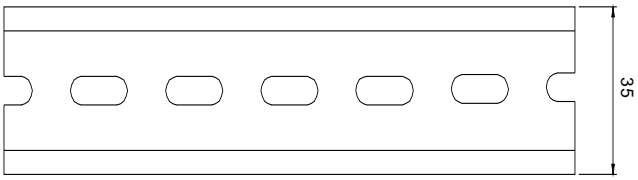

ADMISSIBLE DIN-RAIL:TS35/7.5 OR TS35/15

Terminal Pin No. Assignment

Pin No.	Assignment	Pin No.	Assignment
1	+V	3	AC/L
2	-V	4	AC/N

■ Installation Manual

Please refer to : http://www.meanwell.com/manual.html