SILP2020-50M



Key Features

Available Diffuser Colours: Opal (60% light output for bright, smooth diffusion)

Available Diffuser Shapes: Flat

Mounting Type: Recessed

Body Material: Silicone

Available Lengths: 20M, 50M

Warranty: 2 Years

Key Feature Spec: Seamless, Continuous Light. Flexible, Customisable Design. Fast, Hassle-Free Installation & Maintenance

DUAL BEND | IK06 | IP20

Mechanical Data

Bend Direction	Dual
Diffuser Transparency	60 %
Illuminated Surface Width	20 mm
Min · Pitch for Diffusion	120
Max · LED Strip Light Width	10 mm
No · of Rows for Non-Spotting	1
Product Inner Depth	9 mm
Body Colour	White
Diffuser Included	Yes

Ultra LEDs have taken reasonable care to ensure that the information in this datasheet is accurate at time of publication however it should be noted that all specifications are subject to tolerance. Descriptive specifications such as colour are subjective. Ultra LEDs reserve the right to update specifications without notice. The information in the datasheet may only be relied on by customers of Ultra LEDs in accordance with applicable terms and conditions

Diffuser Shape	Flat
Product Weight	14650 g
Product Dimensions	50000x28x20 mm

Dimensions

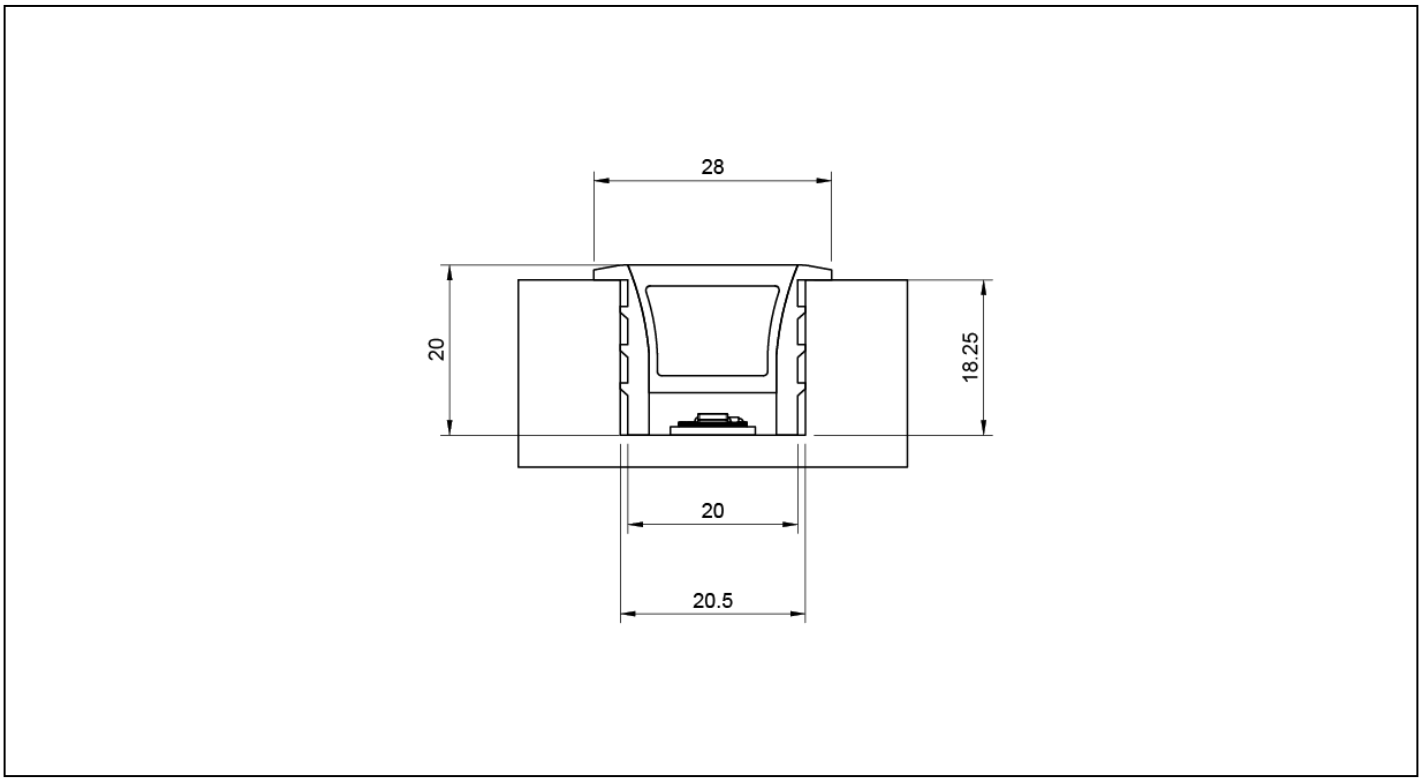

Photometric Data

Diffuser Colour	Opal
Diffuser Finish	Silicone

Environment

Body Material	Silicone
Impact Protection (IK)	IK6
Ingress Protection (IP)	IP20
Mounting Type	Recessed

Packaging & Shipping

Ultra LEDs have taken reasonable care to ensure that the information in this datasheet is accurate at time of publication however it should be noted that all specifications are subject to tolerance. Descriptive specifications such as colour are subjective. Ultra LEDs reserve the right to update specifications without notice. The information in the datasheet may only be relied on by customers of Ultra LEDs in accordance with applicable terms and conditions

Items / Sets Per Pack	1

Ultra LEDs have taken reasonable care to ensure that the information in this datasheet is accurate at time of publication however it should be noted that all specifications are subject to tolerance. Descriptive specifications such as colour are subjective. Ultra LEDs reserve the right to update specifications without notice. The information in the datasheet may only be relied on by customers of Ultra LEDs in accordance with applicable terms and conditions