**LED Driver**

**24V - 100W - IP20 - Non-Dimmable**

## SKU: TAG24V100W-S




24V | UP TO 100W | IP20 | NON DIM | 3YR Warranty

**Key Features**

- 24V Constant Voltage
- Non-Dimmable
- Suitable for dry environments
- Plastic Casing
- CLASS II
- Built-in Protection
- 3 Year Warranty

**Output**

| | |
|---|---|
| Output Voltage | 24VDC |
| Output Current | 4.17A |
| Rated Power | 100W |
| Voltage Tolerance | ±5% |
| Startup Time | <300ms |
| Standby Power | <0.4W |
| Efficiency | >91% |

**Environment**

| | |
|---|---|
| Body Material | PC (polycarbonate) |
| Ingress Protection | IP20 |
| Impact Rating | - |
| Min. Operating Temperature | -20°C |
| Max. Operating Temperature | +45°C |
| Min. Storage Temperature | -40°C |
| Max. Storage Temperature | +85°C |
| Working Humidity | 10~90% |

**Input**

| | |
|---|---|
| Input Voltage Range | AC200-240V |
| Input Frequency | 50/60Hz |
| Power Factor | 0.98 |
| Input Current | 0.6A |
| Inrush Current | 60A |

**Protection**

| | |
|---|---|
| Over Load Protection | Yes, automatic power off |
| Short Circuit Protection | Yes, restores after short circuit |
| Over Voltage Protection | Yes |
| Over Temp. Protection | Yes |
| Electrical Safety Class | CLASS II |

**Control**

| | |
|---|---|
| Dimmable | - |
| Dimming Type | - |
| Control Input | - |
| Dimming Range | - |

**Dimensions**

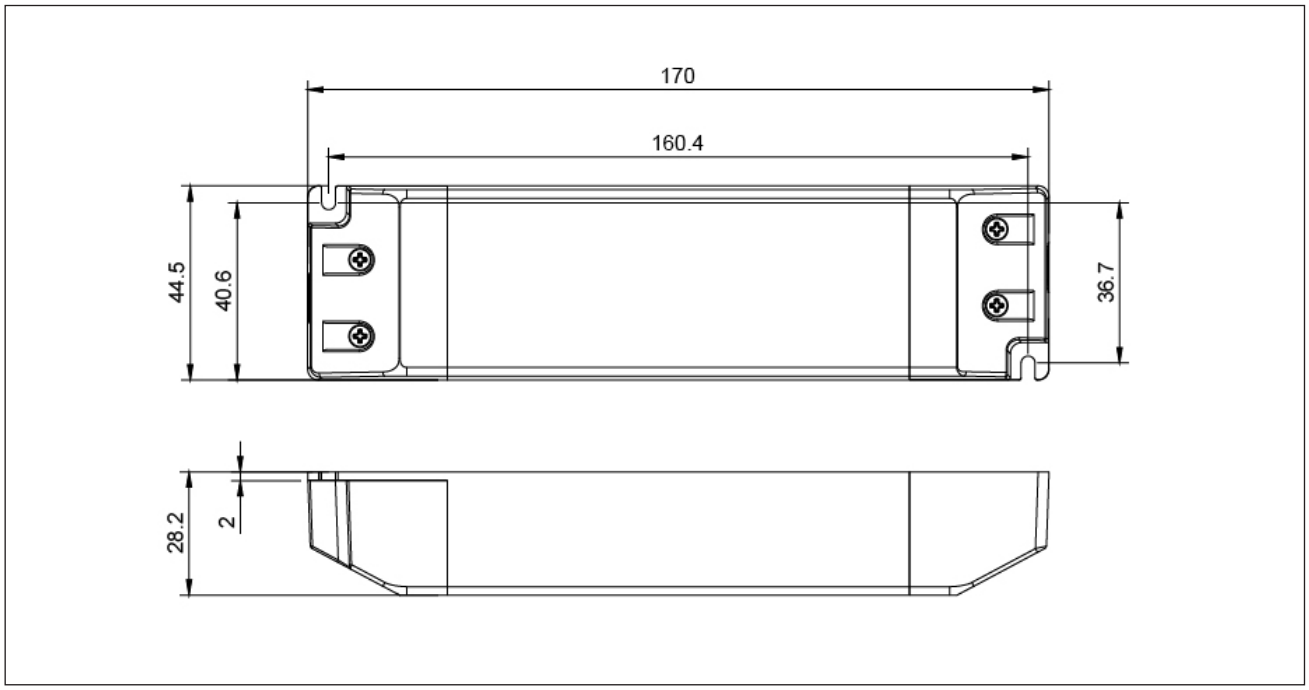


**Safety & EMC Standard**

| | |
|---|---|
| UL | - |
| TUV | EN61347-1:2015, EN61347-2-13:2014+A1, EN62493:2015 |
| CE | EN61347-2-13:2014+A1, EN61347-1:2015 |
| Harmonics | EN IEC 61000-3-2 |
| Conduction CE | EN55015 |
| Radiation RE | EN55015 |

**Other**

| | |
|---|---|
| Lifetime | 30,000 hrs |
| Type | Constant Voltage |
| Warranty | 3 Years |
| Weight | 280g |