LED Driver

24V - 150W - IP20 - Non-Dimmable

SKU: TAG24V150W-S



24V | UP TO 150W | IP20 | NON DIM | 3YR Warranty

Key Features

- 24V Constant Voltage
- Non-Dimmable
- Suitable for dry environments
- Plastic Casing
- CLASS II
- Built-in Protection
- 3 Year Warranty

Output

Output Voltage	24VDC
Output Current	6.25A
Rated Power	150W
Voltage Tolerance	±5%
Startup Time	<500ms
Standby Power	<0.4W
Efficiency	>92%

Environment

Body Material	PC (polycarbonate)
Ingress Protection	IP20
Impact Rating	-
Min. Operating Temperature	-20°C
Max. Operating Temperature	+45°C
Min. Storage Temperature	-40°C
Max. Storage Temperature	+85°C
Working Humidity	10~90%

Input

Input Voltage Range	AC220-240V
Input Frequency	50/60Hz
Power Factor	0.97
Input Current	0.9A
Inrush Current	65A

Protection

Over Load Protection	Yes, automatic power off
Short Circuit Protection	Yes, restores after short circuit
Over Voltage Protection	Yes
Over Temp. Protection	Yes
Electrical Safety Class	CLASS II

Control

Dimmable	-
Dimming Type	-
Control Input	-
Dimming Range	-

Dimensions

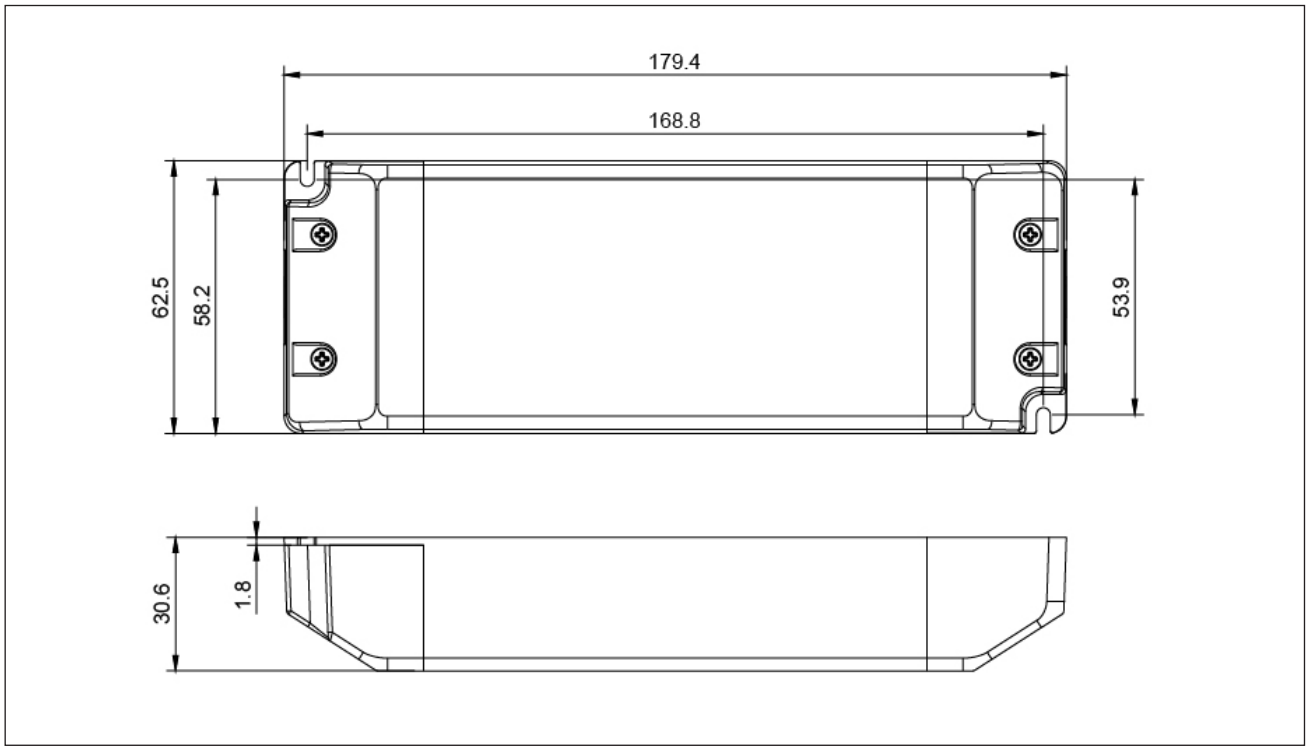

Safety & EMC Standard

UL	-
TUV	EN61347-1:2015, EN61347-2-13:2014+A1, EN62493:2015
CE	EN61347-2-13:2014+A1, EN61347-1:2015
Harmonics	EN IEC 61000-3-2
Conduction CE	EN55015
Radiation RE	EN55015

Other

Lifetime	50,000 hrs
Type	Constant Voltage
Warranty	3 Years
Weight	420g