LTECH | DMX | 12-24V | LED Decoder | 12 Channel | 4A | RGB+W

LT-912-OLED / ITM001463



Datasheet

20-08-2026

LTECH | DMX | 12-24V | LED Decoder | 12 Channel | 4A | RGB+W



Channels	Control In	IP Rating	Voltage In	Warranty
12CH	DMX	IP20	12-24V	5 Years

SKU: LT-912-OLED

ITM: ITM001463

Key Features:

- **Colour Control Type:** RGB, RGBW
- **Input Terminal / Connector Type:** Screw terminal, 3 Pin, 5 Pin, RJ45
- **Output Terminal / Connector Type:** Screw terminal
- **Din Rail Compatible:** No
- **Dimensions (W x H x L):** 122 x 39 x 180mm

Mechanical Data			
Body Colour:	Black	**DIN Rail Compatible:**	No
Product Weight:	730g	**Dimensions (LxWxH):**	180 x 122 x 39mm

Input Data			
Input Current Type:	DC	**Input Terminal / Connector Type:**	Screw terminal, 3 Pin, 5 Pin, RJ45
Input Voltage:	12V - 24V		

Output Data			
Max. Output Current Per Channel:	4A	**No. of Control Channels:**	12
Output Current:	48A	**Output Terminal/Connector Type:**	Screw terminal
Output Voltage:	12V - 24V		

Control Data			
Colour Control Type:	RGB, RGBW	**Control Signal Input:**	DMX
Control Signal Output:	DMX	**Screen Type:**	OLED

Environmental Data			
Body Material:	Metal	**Ingress Protection (IP):**	IP20

Protection Data			
Electrical Safety Class:	I	**Over Current Protection:**	Yes
Over Voltage Protection:	Yes		

Dimension Drawing

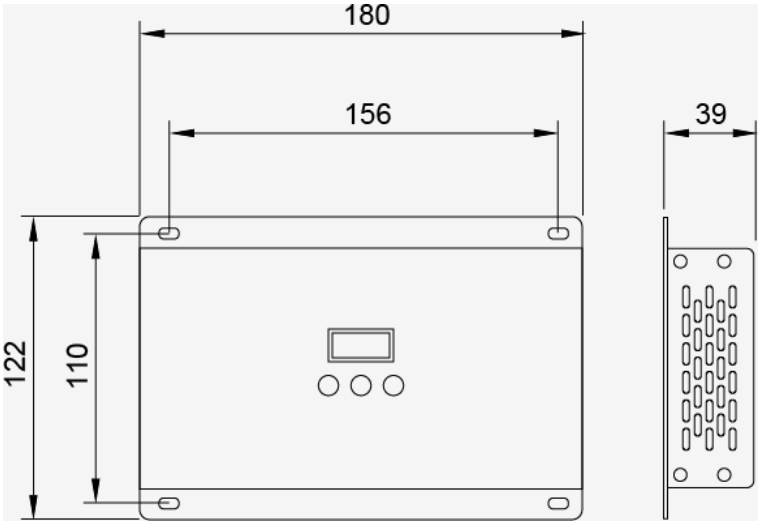

Packaging Data			
Packaging Height:	39mm	**Packaging Length:**	180mm
Packaging Width:	122mm	**Packaging Weight:**	730g

Disclaimer

Tagra Lighting have taken reasonable care to ensure that the information in this datasheet is accurate at time of publication however it should be noted that all specifications are subject to tolerance. Descriptive specifications such as colour are subjective. Tagra Lighting reserve the right to update specifications without notice. The information in the datasheet may only be relied on by customers of Tagra Lighting in accordance with applicable terms and conditions.

Tagra Lighting is a trading name of T.R Ventures Limited, a company incorporated in England with registered number 07757720. Our registered office is Unit 2, Southfield Industrial Estate, Trafford Park, M17 1SJ.

www.tagra-lighting.co.uk

support@tagra-lighting.co.uk