LTECH | DMX | 5-24V | LED Decoder | 4 Channel | 5A | RGB+W

LT-820-5A / ITM001482



Datasheet

20-08-2026

LTECH | DMX | 5-24V | LED Decoder | 4 Channel | 5A | RGB+W



Channels	Control In	IP Rating	Voltage In	Warranty
4CH	DMX	IP20	5-24V	5 Years

SKU: LT-820-5A

ITM: ITM001482

Key Features:

- **Colour Control Type:** Single Colour, CCT Tunable White, RGB, RGBW
- **Input Terminal / Connector Type:** Screw terminal
- **Output Terminal / Connector Type:** Screw terminal
- **Din Rail Compatible:** No
- **Dimensions (W x H x L):** 44 x 30 x 175mm

Mechanical Data			
Body Colour:	White	**DIN Rail Compatible:**	No
Product Weight:	175g	**Dimensions (LxWxH):**	175 x 44 x 30mm

Input Data			
Input Control Connector Type:	Bare End	**Input Current Type:**	DC
Input Terminal / Connector Type:	Screw terminal	**Input Voltage:**	5V - 24V

Output Data			
Max. Output Current Per Channel:	5A	**No. of Control Channels:**	4
Output Current:	5A	**Output Terminal/Connector Type:**	Screw terminal
Output Voltage:	5V - 24V		

Control Data

Colour Control Type:	Single Colour, CCT Tunable White, RGB, RGBW	**Control Signal Input:**	DMX
Control Signal Output:	DMX	**Screen Type:**	OLED

Environmental Data

Body Material:	Plastic	**Ingress Protection (IP):**	IP20

Dimension Drawing

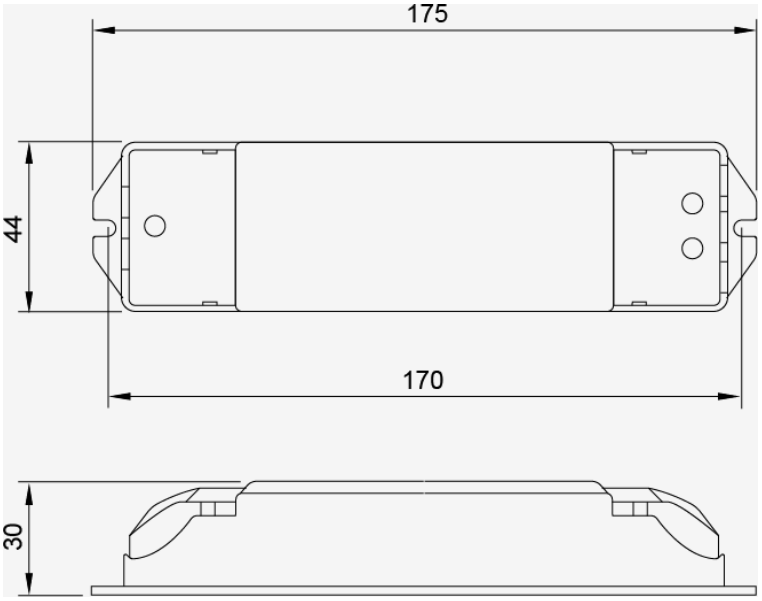

Packaging Data

Fixings Included:	Yes	**Packaging Height:**	30mm
Packaging Length:	175mm	**Packaging Width:**	44mm
Packaging Weight:	175g		

Disclaimer

Tagra Lighting have taken reasonable care to ensure that the information in this datasheet is accurate at time of publication however it should be noted that all specifications are subject to tolerance. Descriptive specifications such as colour are subjective. Tagra Lighting reserve the right to update specifications without notice. The information in the datasheet may only be relied on by customers of Tagra Lighting in accordance with applicable terms and conditions.

Tagra Lighting is a trading name of T.R Ventures Limited, a company incorporated in England with registered number 07757720. Our registered office is Unit 2, Southfield Industrial Estate, Trafford Park, M17 1SJ.

www.tagra-lighting.co.uk

support@tagra-lighting.co.uk