Syndeo by Tagra | Rocker Switch | Wired LED Switch | IP20

SYN-PLSWITCH / ITM001539



Datasheet

Syndeo by Tagra | Rocker Switch | Wired LED Switch | IP20



IP Rating	Material	Mounting	Voltage In	Warranty
IP20	**Plastic**	**Recess**	**12-24V**	**3 Years**

SKU: SYN-PLSWITCH
ITM: ITM001539

Key Features:

- **Sensor Type:** Switch
- **Colour Control Type:** Single Colour
- **Body Colour:** Black
- **Dimensions (whl):** 19 x 16 x 19mm

Mechanical Data			
Body Colour:	Black	**Product Weight:**	39g
Product Height:	16mm	**Product Length:**	19mm
Product Width:	19mm	**Product Diameter:**	23mm

Electrical Data	
Constant Voltage / Constant Current:	CV

Input Data			
Input Control Connector Type:	Bare end	**Input Current:**	0.05A
Input Current Max :	0.05A	**Input Current Type:**	DC
Input Voltage:	12V - 24V		

Output Data			
No of Control Channels:	1	**Output Current:**	0.05A

Output Data			
Output Current Max @12V:	0.05A	**Output Current Max @24V:**	0.05A
Output Current Type:	DC	**Output Voltage:**	12V - 24V

Control Data			
Colour Control Type:	Single Colour	**Default PWM Frequency:**	0Hz
Detection Distance:	0m	**Dimming Range:**	0% - 100%
Interface Type:	uart	**LED Switching Load:**	60
Manual Override:	Yes	**No of Programmes:**	1
Sensor Type:	Switch		

Environmental Data			
Application Environment:	Interior	**Body Material:**	Plastic
Ingress Protection (IP):	IP20	**Interior or Exterior Use:**	Interior
Mounting Type:	Recessed	**Operating Temperature:**	-20°C - 50°C
Storage Humidity:	5% - 70%	**Storage Temperature:**	30°C - 70°C
Working Humidity:	5% - 95%		

Protection Data			
Electrical Safety Class:	II	**Over Current Protection:**	No
Over Temperature Protection:	No	**Over Voltage Protection:**	No
Reverse Polarity Protection:	Yes	**Short Circuit Protection:**	No

Efficiency Data			
No-Load Power Consumption:	0.2W	**Rated Life:**	500000 Hours
Startup Time:	1 Secs		

Dimension Drawing

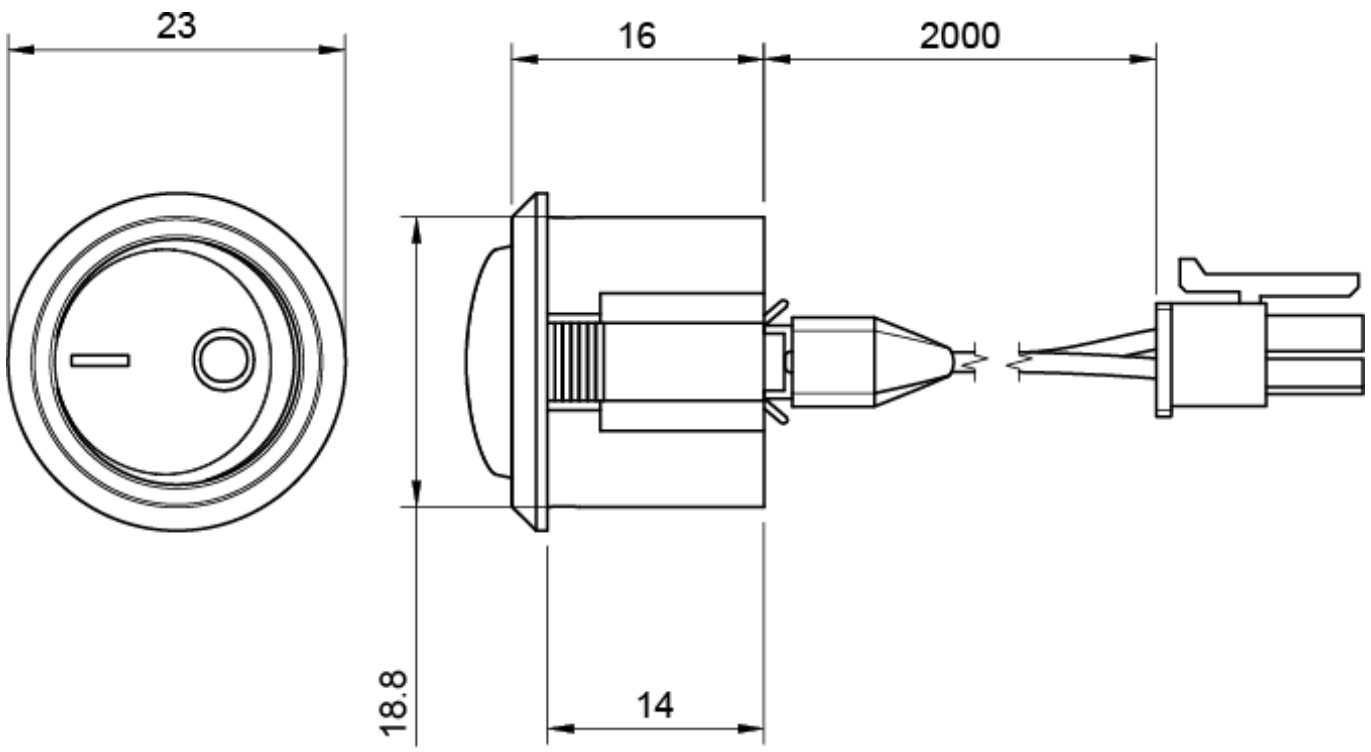

Packaging Data

Fixings Included:	Yes	**Packaging Height:**	50mm
Packaging Length:	40mm	**Packaging Width:**	80mm

Disclaimer

Tagra Lighting have taken reasonable care to ensure that the information in this datasheet is accurate at time of publication however it should be noted that all specifications are subject to tolerance. Descriptive specifications such as colour are subjective. Tagra Lighting reserve the right to update specifications without notice. The information in the datasheet may only be relied on by customers of Tagra Lighting in accordance with applicable terms and conditions.

Tagra Lighting is a trading name of T.R Ventures Limited, a company incorporated in England with registered number 07757720. Our registered office is Unit 2, Southfield Industrial Estate, Trafford Park, M17 1SJ.

www.tagra-lighting.co.uk