# Tagra | SSC16 | LED Profile Mounting Brackets | Silver | Pack of 4

**MOUNT-1616 / ITM001657**

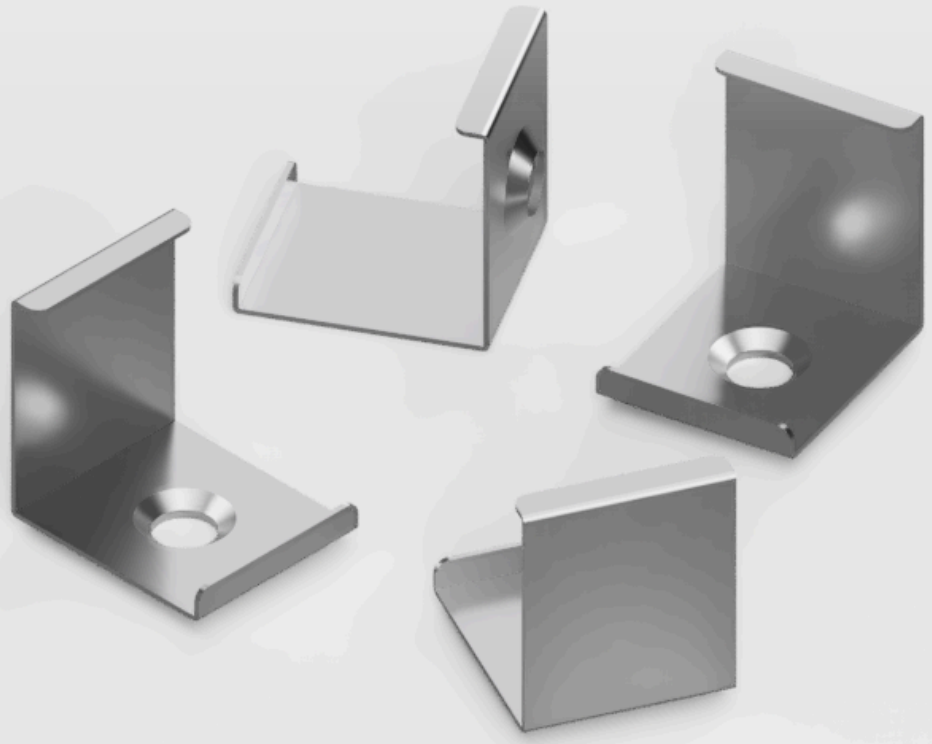

Datasheet

26-08-2026

www.tagra-lighting.co.uk

support@tagra-lighting.co.uk

# Tagra | SSC16 | LED Profile Mounting Brackets | Silver | Pack of 4

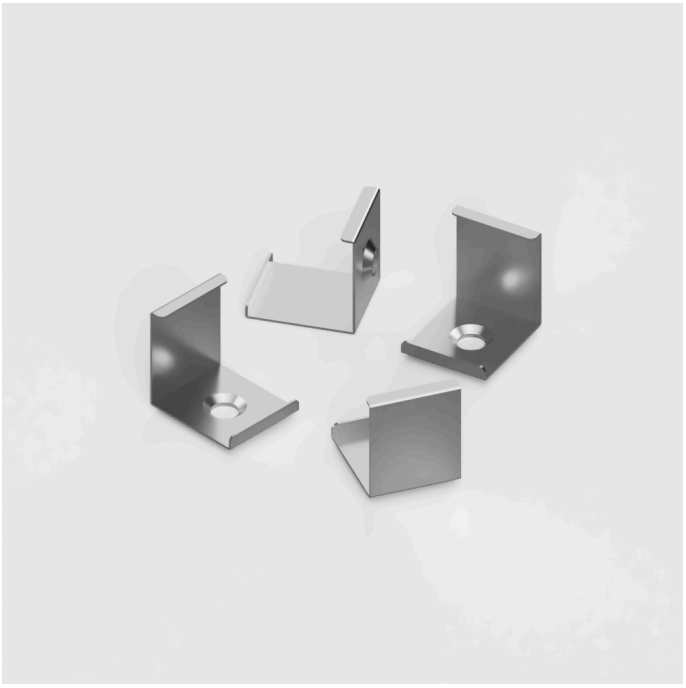

| Colour | Material | Pack Size | Warranty |
|---|---|---|---|
| Silver | ALU | 4 PCS | 5 Years |

**SKU:** MOUNT-1616
**ITM:** ITM001657

**Key Features:**

- **Dimensions (mm):** 260mm x 420mm x 17mm
- **Dimensions (W x H x L):** 260 x 420 x 17mm

| Mechanical Data | | | |
|---|---|---|---|
| **Body Colour:** | Silver | **Dimensions (LxWxH):** | 17 x 260 x 420mm |

| Control Data | |
|---|---|
| **Detection Distance:** | m;) |

| Environmental Data | | | |
|---|---|---|---|
| **Body Material:** | Aluminium | **Ingress Protection (IP):** | IP20 |

## Dimension Drawing

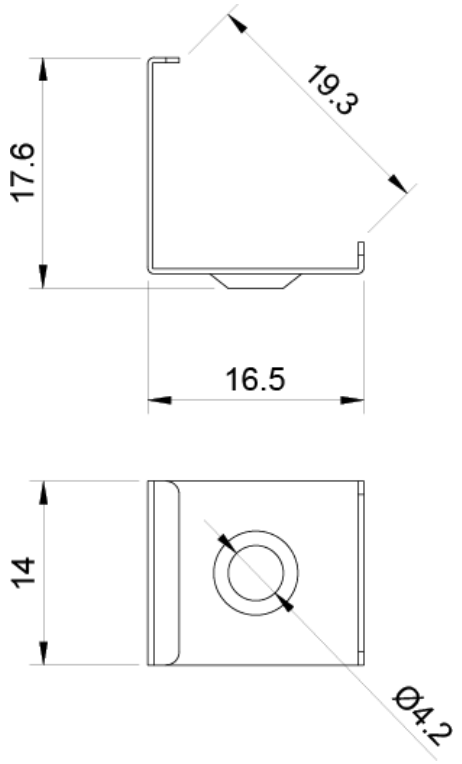


## Packaging Data

| | | | |
|---|---|---|---|
| **Items / Sets Per Pack:** | 4 | **Packaging Height:** | 14mm |
| **Packaging Length:** | 17mm | **Packaging Width:** | 17mm |
| **Packaging Weight:** | 4g | | |

**Disclaimer**

Tagra Lighting have taken reasonable care to ensure that the information in this datasheet is accurate at time of publication however it should be noted that all specifications are subject to tolerance. Descriptive specifications such as colour are subjective. Tagra Lighting reserve the right to update specifications without notice. The information in the datasheet may only be relied on by customers of Tagra Lighting in accordance with applicable terms and conditions.

Tagra Lighting is a trading name of T.R Ventures Limited, a company incorporated in England with registered number 07757720. Our registered office is Unit 2, Southfield Industrial Estate, Trafford Park, M17 1SJ.

www.tagra-lighting.co.uk

support@tagra-lighting.co.uk