Tagra | LED Strip End Caps | 10mm | IP67 | Pack of 5

COB8MMENDCAPS / ITM001959

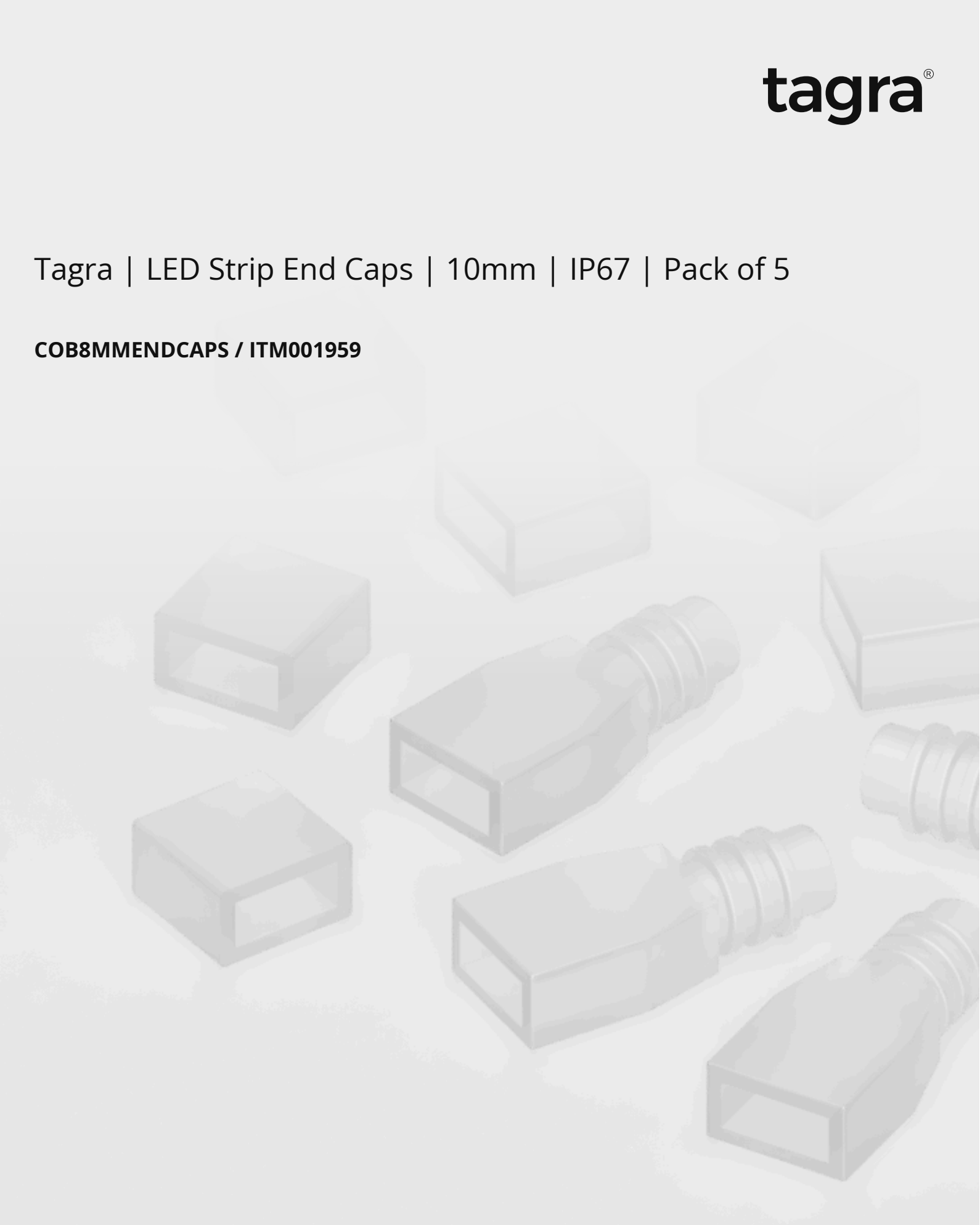

Datasheet

Tagra | LED Strip End Caps | 10mm | IP67 | Pack of 5

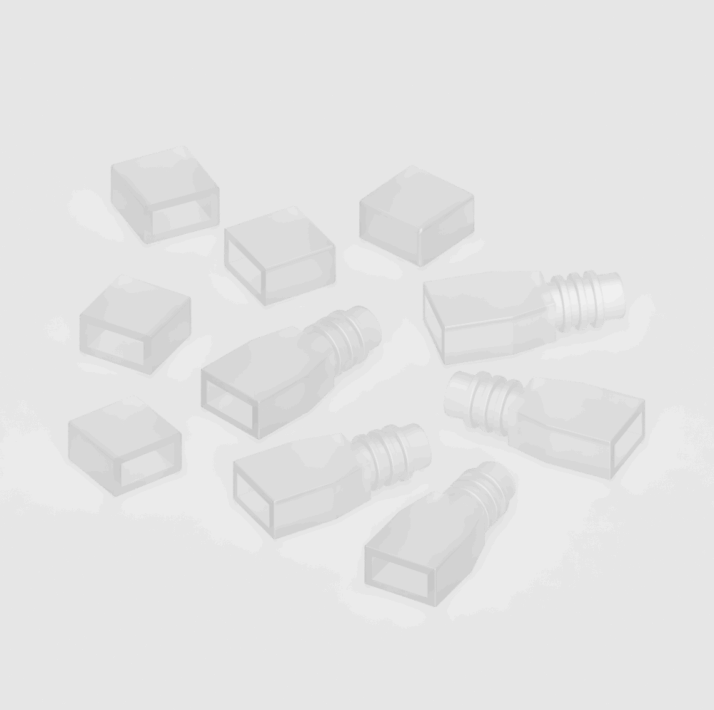

Colour	Material	Pack Size	Warranty
Transp.	**ALU**	**5 PCS**	**2 Years**

SKU: COB8MMENDCAPS
ITM: ITM001959

Key Features:

- **End Cap Direction:** End
- **Dimensions (whl):** 5 x 8 x 32mm

Mechanical Data			
Body Colour:	Transparent	**Product Weight:**	5g
Product Height:	8mm	**Product Length:**	32mm
Product Width:	5mm		

Environmental Data			
Body Material:	Anodised Aluminium, PC Diffuser	**Ingress Protection (IP):**	IP67

Dimension Drawing

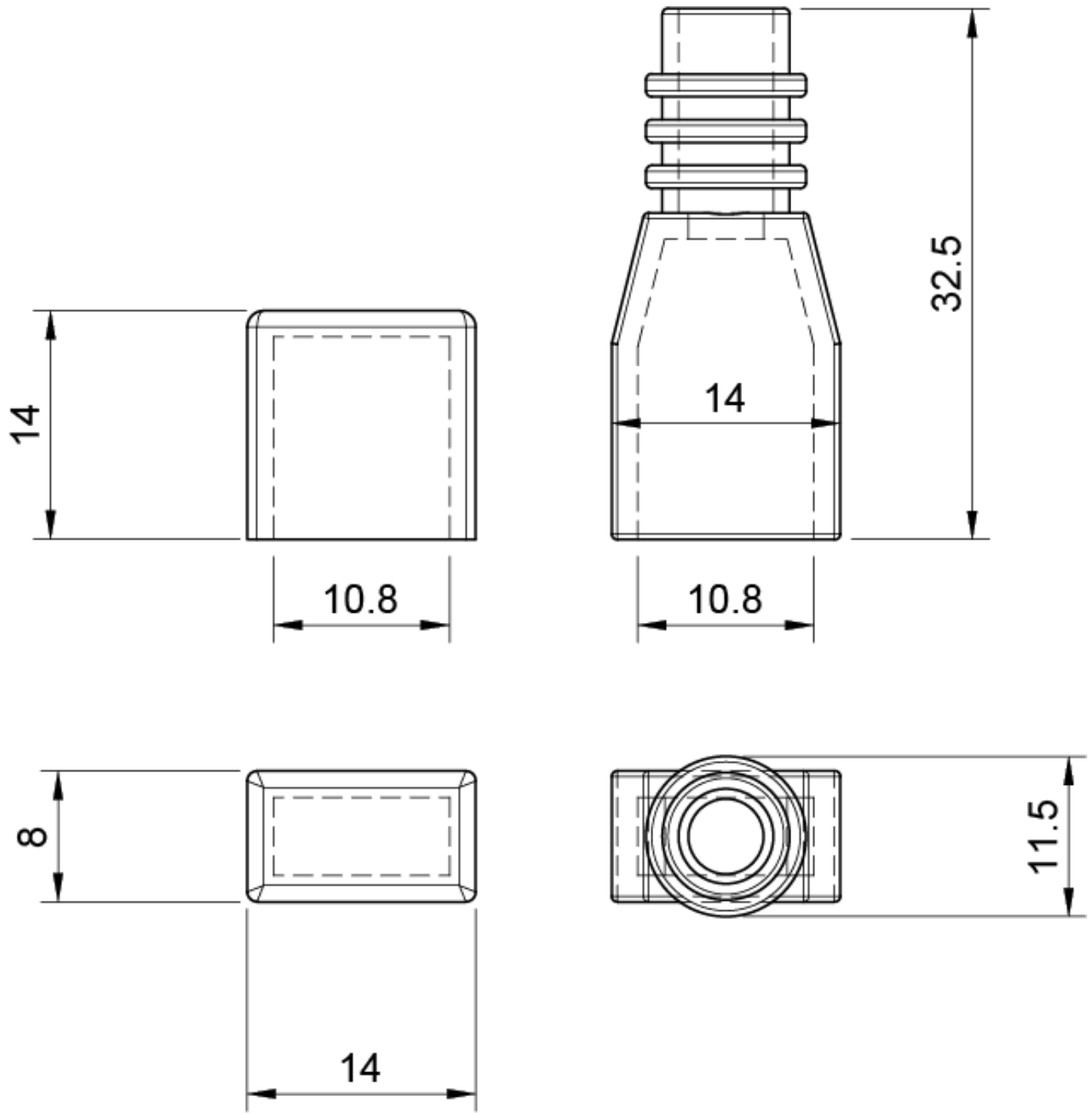

Packaging Data

Items / Sets Per Pack:	5	**Packaging Height:**	2mm
Packaging Length:	180mm	**Packaging Width:**	200mm
Packaging Weight:	27g		

Disclaimer

Tagra Lighting have taken reasonable care to ensure that the information in this datasheet is accurate at time of publication however it should be noted that all specifications are subject to tolerance. Descriptive specifications such as colour are subjective. Tagra Lighting reserve the right to update specifications without notice. The information in the datasheet may only be relied on by customers of Tagra Lighting in accordance with applicable terms and conditions.

Tagra Lighting is a trading name of T.R Ventures Limited, a company incorporated in England with registered number 07757720. Our registered office is Unit 2, Southfield Industrial Estate, Trafford Park, M17 1SJ.

www.tagra-lighting.co.uk

