Tagra | Pack of 8 End Caps | Silicone | For Joinery LED Neon Flex Micro 3 | Top End Outlet

NEONTOP306-ENDCAPS-TOP / ITM002017

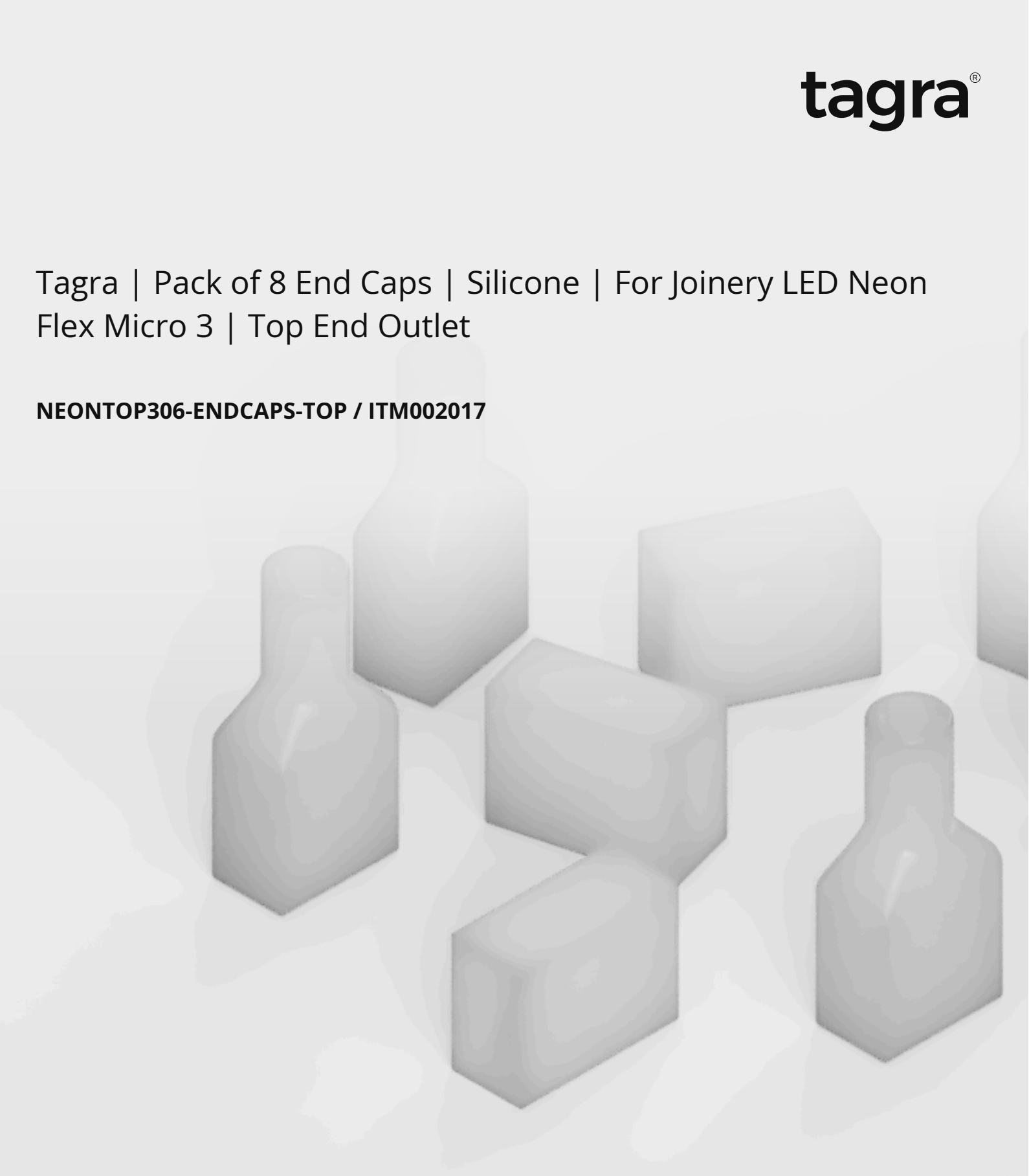

Datasheet

Tagra | Pack of 8 End Caps | Silicone | For Joinery LED Neon Flex Micro 3 | Top End Outlet



Colour	Material	Pack Size	Warranty
Transp.	**Silicone**	**8 PCS**	**5 Years**

SKU: NEONTOP306-ENDCAPS-TOP
ITM: ITM002017

Key Features:

- **End Cap Direction:** Top
- **Dimensions (whl):** 3 x 6 x 3mm

Mechanical Data			
Body Colour:	Transparent	**Product Weight:**	1g
Product Height:	6mm	**Product Length:**	3mm
Product Width:	3mm	**End Cap Direction:**	Top

Environmental Data	
Body Material:	Silicone

Dimension Drawing

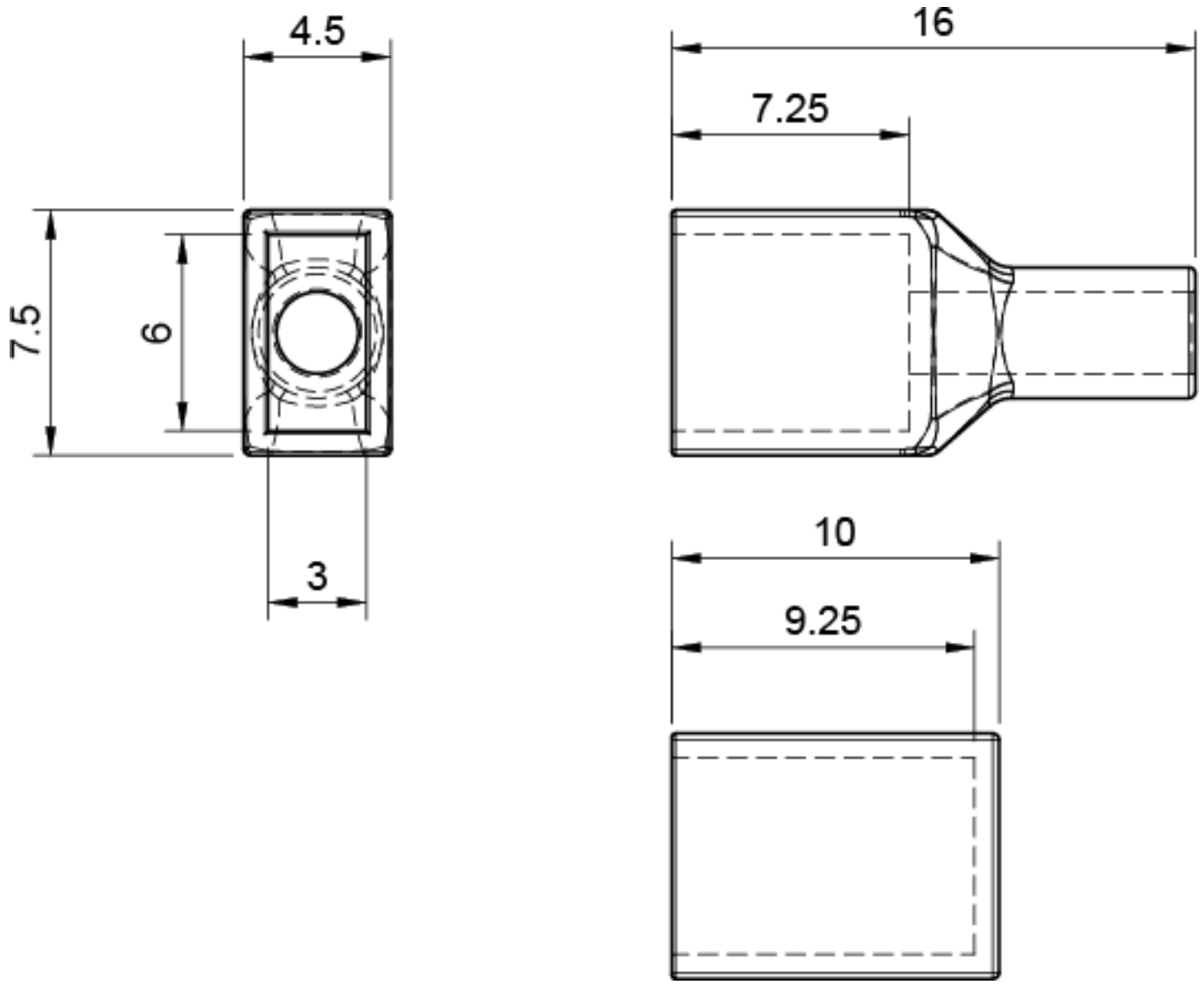

Packaging Data

Items / Sets Per Pack:	8	**Packaging Height:**	6mm
Packaging Length:	3mm	**Packaging Width:**	3mm
Packaging Weight:	1g		

Disclaimer

Tagra Lighting have taken reasonable care to ensure that the information in this datasheet is accurate at time of publication however it should be noted that all specifications are subject to tolerance. Descriptive specifications such as colour are subjective. Tagra Lighting reserve the right to update specifications without notice. The information in the datasheet may only be relied on by customers of Tagra Lighting in accordance with applicable terms and conditions.

Tagra Lighting is a trading name of T.R Ventures Limited, a company incorporated in England with registered number 07757720. Our registered office is Unit 2, Southfield Industrial Estate, Trafford Park, M17 1SJ.

www.tagra-lighting.co.uk

