tagra®

Tagra | Pushfit Junction Box for Plaster-in Downlights

PJB-GU10 / ITM002091

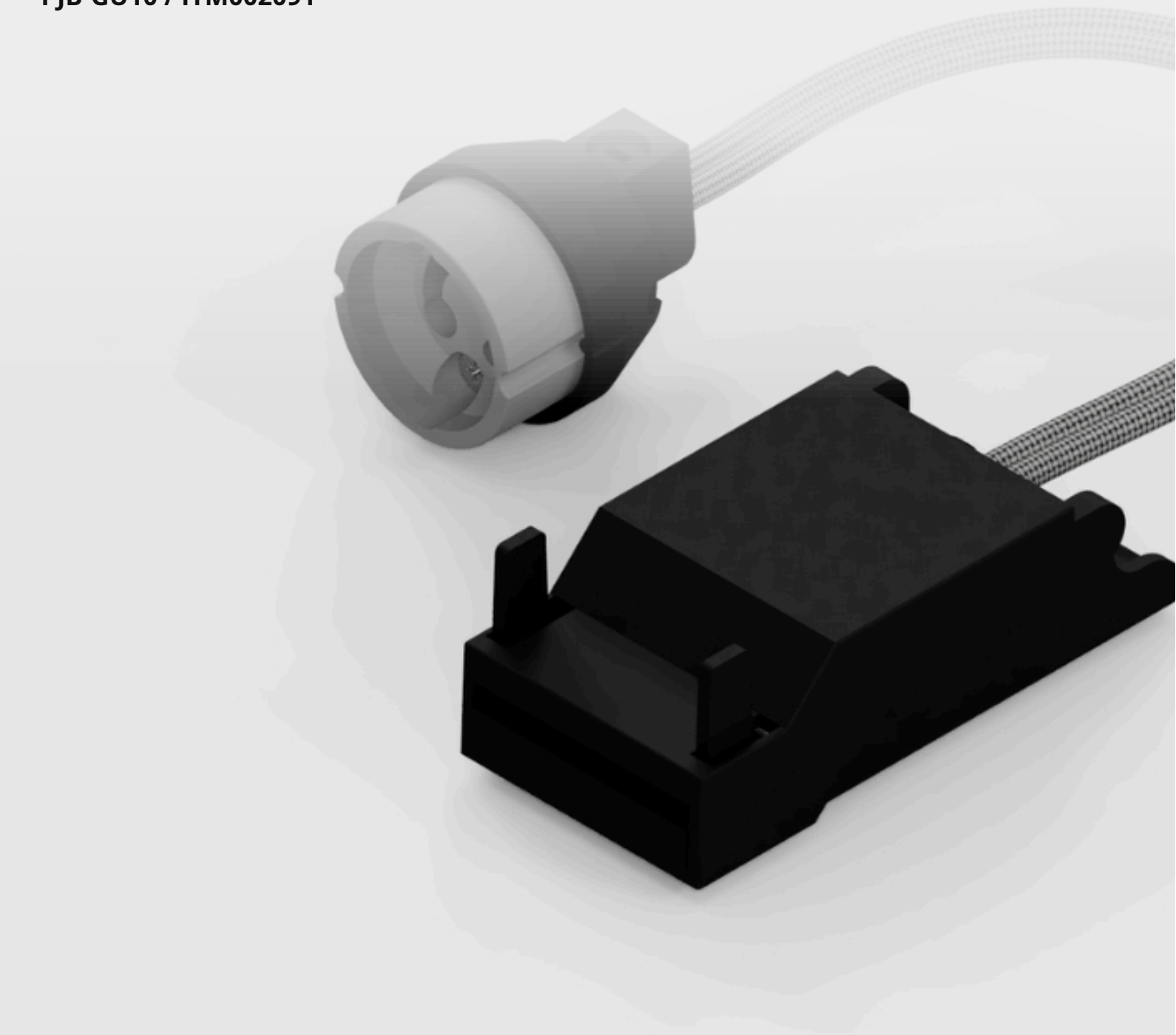

Datasheet

Tagra | Pushfit Junction Box for Plaster-in Downlights



Colour	Material	Pack Size	Warranty
Silver	Plastic	1 PCS	2 Years

SKU: PJB-GU10
ITM: ITM002091

Key Features:

- **Dimensions (whl):** 38 x 88 x 100mm

Mechanical Data			
Body Colour:	Silver	**Product Weight:**	0g
Product Height:	88mm	**Product Length:**	100mm
Product Width:	38mm		

Photometric Data			
Beam Angle:	360°	**Diffuser Colour:**	Opaque

Environmental Data			
Application Environment:	Indoor	**Body Finish:**	Black
Body Material:	Plastic	**Ingress Protection (IP):**	IP20
Interior or Exterior Use:	Exterior	**Working Humidity:**	50%

Dimension Drawing

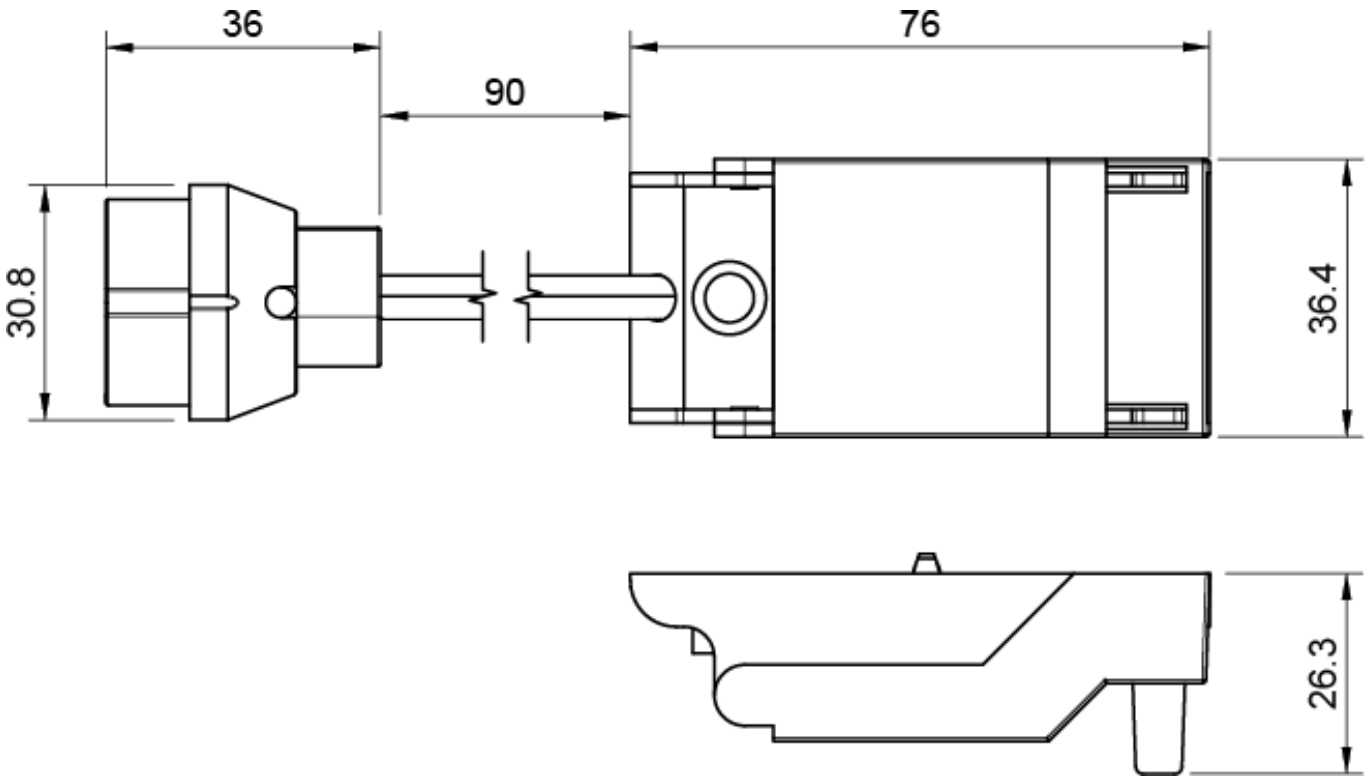

Packaging Data

Fixings Included:	yes	**Items / Sets Per Pack:**	1

Disclaimer

Tagra Lighting have taken reasonable care to ensure that the information in this datasheet is accurate at time of publication however it should be noted that all specifications are subject to tolerance. Descriptive specifications such as colour are subjective. Tagra Lighting reserve the right to update specifications without notice. The information in the datasheet may only be relied on by customers of Tagra Lighting in accordance with applicable terms and conditions.

Tagra Lighting is a trading name of T.R Ventures Limited, a company incorporated in England with registered number 07757720. Our registered office is Unit 2, Southfield Industrial Estate, Trafford Park, M17 1SJ.

www.tagra-lighting.co.uk