tagra®

Tagra | LED Module String | Colour Series | 12V | IP65 | 3 Dot | 0.96W | RGB+W | 20 PCS

TM12-RGB65K3MOD / ITM002348



Datasheet

Tagra | LED Module String | Colour Series | 12V | IP65 | 3 Dot | 0.96W | RGB+W | 20 PCS

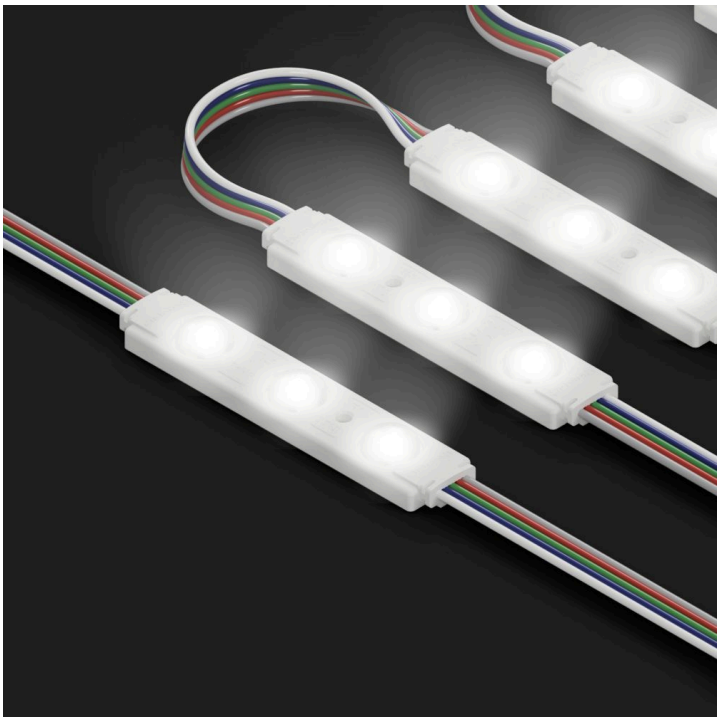

Beam Angle	CRI	IP Rating	Voltage In	Warranty
160°	>75	IP65	12V	3 Years

SKU: TM12-RGB65K3MOD
ITM: ITM002348

Key Features:

- **Max Chain Length:** 20m
- **Product Length:** 0.087m
- **Dimensions (wh):** 18 x 8 mm

Mechanical Data			
Cable Length:	930mm	**Cable Sheath Material:**	PVC
Cable Weight:	20AWG	**Centre to Centre Distance:**	173
Entry Cable Direction:	End	**LED Chip Brand:**	Sanan
LED Pitch:	240mm	**Product Weight:**	2g
Recommended Enclosure Depth:	60mm	**Self Adhesive Brand:**	3M
Suitable for Backlighting Double-Sided Light Box:	No	**Suitable for Backlighting Single-Sided Light Box:**	Yes
Suitable for Channel Letters:	Yes	**Suitable for Side Lighting Double-Sided Light Box:**	No
Suitable for Side Lighting Single-Sided Light Box:	No	**Product Height:**	8mm
Product Length:	87mm	**Product Width:**	18mm
Max Chain Length:	20mm	**Module Configuration:**	1x3

Electrical Data

Constant Voltage / Constant Current:	CV	**Current Max Rated:**	0.08A
Current Max White @1 Metre:	0.08A	**Module Wattage:**	0.96W
No of Modules Per Chain (power from one end):	20	**Wattage of Chain:**	19.2W

Input Data

Input Voltage:	12V

Control Data

Dimmable:	Yes

Photometric Data

Beam Angle:	160°	**CCT:**	6500K
Colour Type:	RGBW	**CRI:**	75
Lumen Total:	23Lm	**Lumens Per Watt:**	35Lm/W
Lumens Per Watt (Blue):	5Lm/W	**Lumens Per Watt (Green):**	22Lm/W
Lumens Per Watt (Red):	6Lm/W	**Lumens Per Watt (White):**	35Lm/W
SDCM:	<5	**Wavelength Blue:**	460 - 475
Wavelength Green:	527 - 515	**Wavelength Red:**	615 - 630

Environmental Data

Application Environment:	Indoor	**Case Temperature Max (tc):**	50°C
Ingress Protection (IP):	IP65	**Operating Temperature:**	-25°C - 60°C
Storage Humidity:	70%	**Storage Temperature:**	-25°C - 70°C

Efficiency Data

L70B50:	25000 Hours

Dimension Drawing

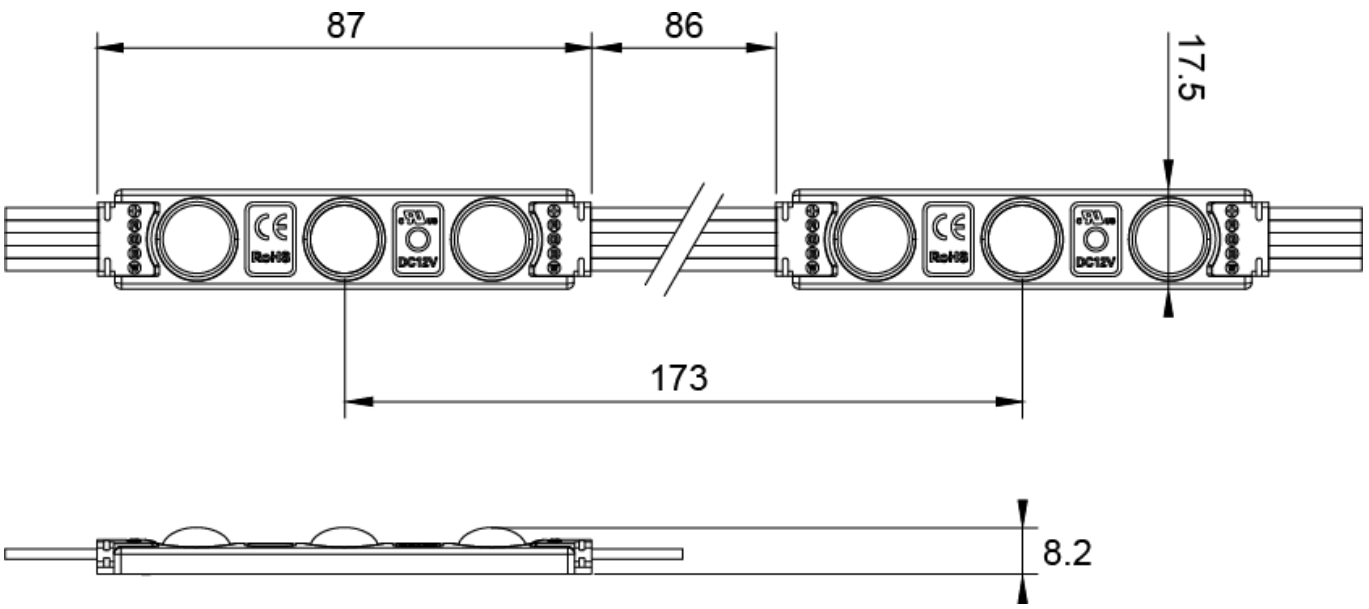

Packaging Data

Power Cord Included:	Yes

Disclaimer

Tagra Lighting have taken reasonable care to ensure that the information in this datasheet is accurate at time of publication however it should be noted that all specifications are subject to tolerance. Descriptive specifications such as colour are subjective. Tagra Lighting reserve the right to update specifications without notice. The information in the datasheet may only be relied on by customers of Tagra Lighting in accordance with applicable terms and conditions.

Tagra Lighting is a trading name of T.R Ventures Limited, a company incorporated in England with registered number 07757720. Our registered office is Unit 2, Southfield Industrial Estate, Trafford Park, M17 1SJ.

www.tagra-lighting.co.uk