Ntube by Tagra | Mounting Brackets | 2 Pack

NTUBE-BRACKET MOUNT-SET / ITM002920



Datasheet

Ntube by Tagra | Mounting Brackets | 2 Pack



Colour	Material	Mounting	Pack Size	Warranty
White	Plastic	Multi	2 PCS	2 Years

SKU: NTUBE-BRACKET MOUNT-SET
ITM: ITM002920

Key Features:

- **Max Mounted Or Suspended Load:** 1kg
- **Dimensions (mm):** 28mm x 35mm x 9mm
- **Dimensions (whl):** 28 x 35 x 9mm

Mechanical Data			
Body Colour:	White	**Product Height:**	35mm
Product Length:	9mm	**Product Width:**	28mm
Max Mounted or Suspended load:	1mm	**Shape Angle:**	360°

Photometric Data	
Beam Angle:	350°

Environmental Data			
Body Material:	Plastic	**Ingress Protection (IP):**	IP20
Mounting Type:	Suspended, Wall Mounted, Floor Standing		

Dimension Drawing

Dimensions in mm

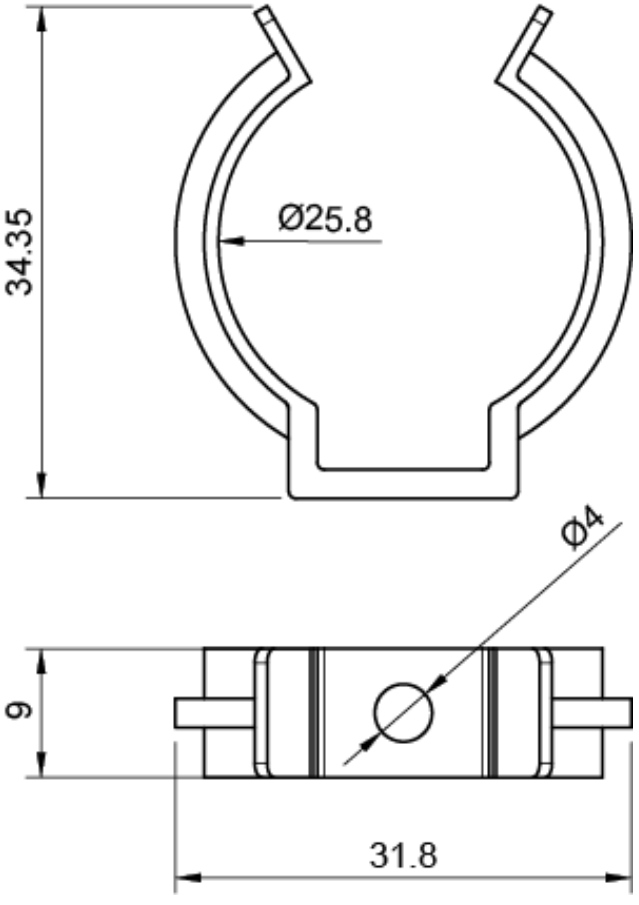

Packaging Data

Fixings Included:	No	**Items / Sets Per Pack:**	2
Packaging Height:	31mm	**Packaging Length:**	9mm
Packaging Width:	28mm	**Packaging Weight:**	9g

Disclaimer

Tagra Lighting have taken reasonable care to ensure that the information in this datasheet is accurate at time of publication however it should be noted that all specifications are subject to tolerance. Descriptive specifications such as colour are subjective. Tagra Lighting reserve the right to update specifications without notice. The information in the datasheet may only be relied on by customers of Tagra Lighting in accordance with applicable terms and conditions.

Tagra Lighting is a trading name of T.R Ventures Limited, a company incorporated in England with registered number 07757720. Our registered office is Unit 2, Southfield Industrial Estate, Trafford Park, M17 1SJ.

www.tagra-lighting.co.uk

