Tagra | RF 2.4GHz & Wi-Fi | 12-24V | 5in1 | LED Controller | 5 Channel | Single Colour - RGB+CCT

PSCONN-5IN1WIFIRCVRB / ITM018103

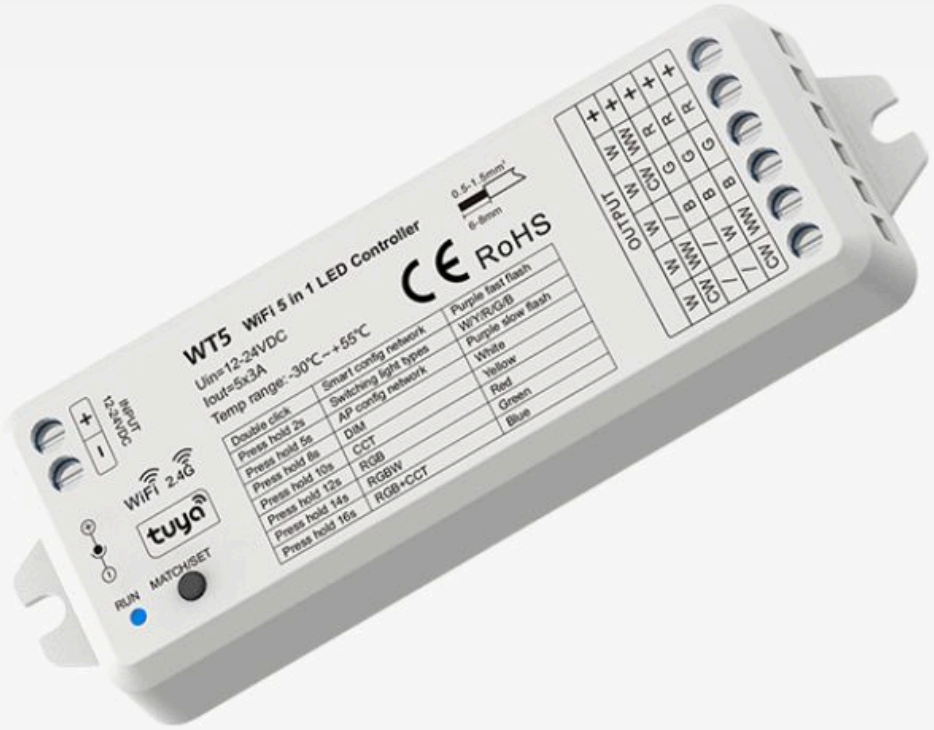

Datasheet

18-08-2026

Tagra | RF 2.4GHz & Wi-Fi | 12-24V | 5in1 | LED Controller | 5 Channel | Single Colour - RGB+CCT



Channels	Control In	IP Rating	Voltage In	Warranty
5CH	RF 2.4GHz	IP20	12-24V	5 Years

SKU: PSCONN-5IN1WIFIRCVRB
ITM: ITM018103

Key Features:

- **Colour Control Type:** Single Colour, CCT Tunable White, RGB, RGBW, RGBCCT Tunable White
- **Input Terminal / Connector Type:** Screw terminal
- **Output Terminal / Connector Type:** Screw terminal
- **Control Distance:** 30m
- **Din Rail Compatible:** No
- **Dimensions (W x H x L):** 38 x 20 x 114mm

Mechanical Data			
Body Colour:	White	**DIN Rail Compatible:**	No
Product Weight:	73g	**Dimensions (LxWxH):**	114 x 38 x 20mm

Electrical Data	
Constant Voltage / Constant Current:	CV

Input Data			
Input Current:	15.5A	**Input Terminal / Connector Type:**	Screw terminal
Input Voltage:	12V - 24V		

Output Data			
Max. Output Current Per Channel:	3A	**No. of Control Channels:**	5
Output Current:	3A	**Output Terminal/Connector Type:**	Screw terminal
Output Voltage:	12V - 24V		

Control Data			
Colour Control Type:	Single Colour, CCT Tunable White, RGB, RGBW, RGBCCT Tunable White	**Control Distance (barrier-free):**	30m
Control Signal Input:	RF 2.4GHz	**Default PWM Frequency:**	1000Hz
Dimming Curve:	Logarithmic%	**Dimming Greyscale:**	4096%
Dimming Range:	0% - 10%		

Environmental Data			
Body Material:	Plastic	**Case Temperature Max. (tc):**	85°C
Ingress Protection (IP):	IP20	**Interior or Exterior Use:**	Interior
Operating Temperature:	-30°C - 55°C		

Protection Data			
Over Temperature Protection:	Yes	**Reverse Polarity Protection:**	Yes
Short Circuit Protection:	Yes		

Dimension Drawing

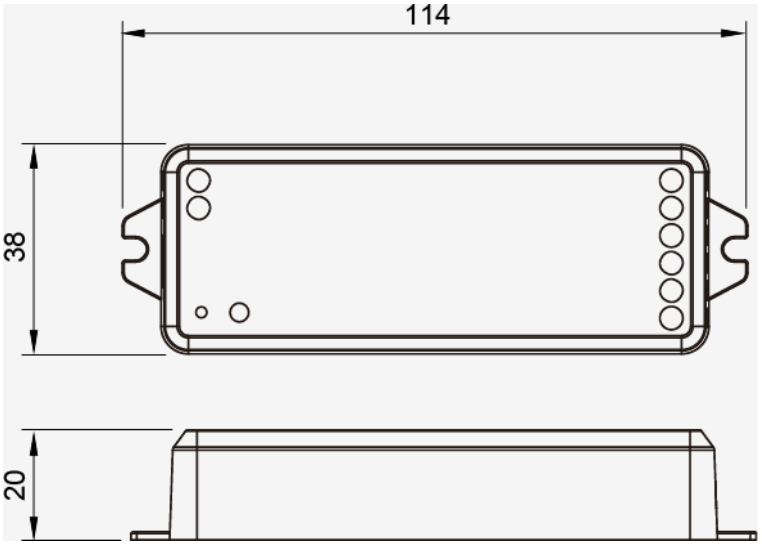

Packaging Data

Packaging Height:	45mm	**Packaging Length:**	25mm
Packaging Width:	120mm	**Packaging Weight:**	80g

Disclaimer

Tagra Lighting have taken reasonable care to ensure that the information in this datasheet is accurate at time of publication however it should be noted that all specifications are subject to tolerance. Descriptive specifications such as colour are subjective. Tagra Lighting reserve the right to update specifications without notice. The information in the datasheet may only be relied on by customers of Tagra Lighting in accordance with applicable terms and conditions.

Tagra Lighting is a trading name of T.R Ventures Limited, a company incorporated in England with registered number 07757720. Our registered office is Unit 2, Southfield Industrial Estate, Trafford Park, M17 1SJ.

www.tagra-lighting.co.uk

support@tagra-lighting.co.uk