tagra®

Tagra | SPI | 5-24V | LED Controller | RGB & RGB+W | IP20

SPI-CNTRLR-RGB/RGBW / ITM003044



Datasheet

Tagra | SPI | 5-24V | LED Controller | RGB & RGB+W | IP20



Channels	Control In	IP Rating	Voltage In	Warranty
4CH	RF 2.4GHz	IP20	5-24V	5 Years

SKU: SPI-CNTRLR-RGB/RGBW
ITM: ITM003044

Key Features:

- **Colour Control Type:** RGB, RGBW
- **Input Terminal / Connector Type:** Screw terminal
- **Output Terminal / Connector Type:** Screw terminal
- **Control Distance:** 15m
- **Din Rail Compatible:** No
- **Dimensions (whl):** 20 x 38 x 114mm

Mechanical Data			
Body Colour:	White	**DIN Rail Compatible:**	No
Product Weight:	60g	**Product Height:**	38mm
Product Length:	114mm	**Product Width:**	20mm

Input Data			
Input Current Max :	8A	**Input Current Type:**	DC
Input Terminal / Connector Type:	Screw terminal	**Input Voltage:**	5V - 24V

Output Data			
No of Control Channels:	4	**Output Current:**	8A
Output Current Max @48V:	10A	**Output Terminal/Connector Type:**	Screw terminal

Control Data			
Colour Control Type:	RGB, RGBW	**Control Distance (barrier-free):**	15m

Control Data			
Control Signal Input:	RF 2.4GHz	**Control Signal Output:**	SPI

Environmental Data			
Body Material:	Plastic	**Ingress Protection (IP):**	IP20
Interior or Exterior Use:	Interior	**Mounting Type:**	Surface Mounted

Dimension Drawing

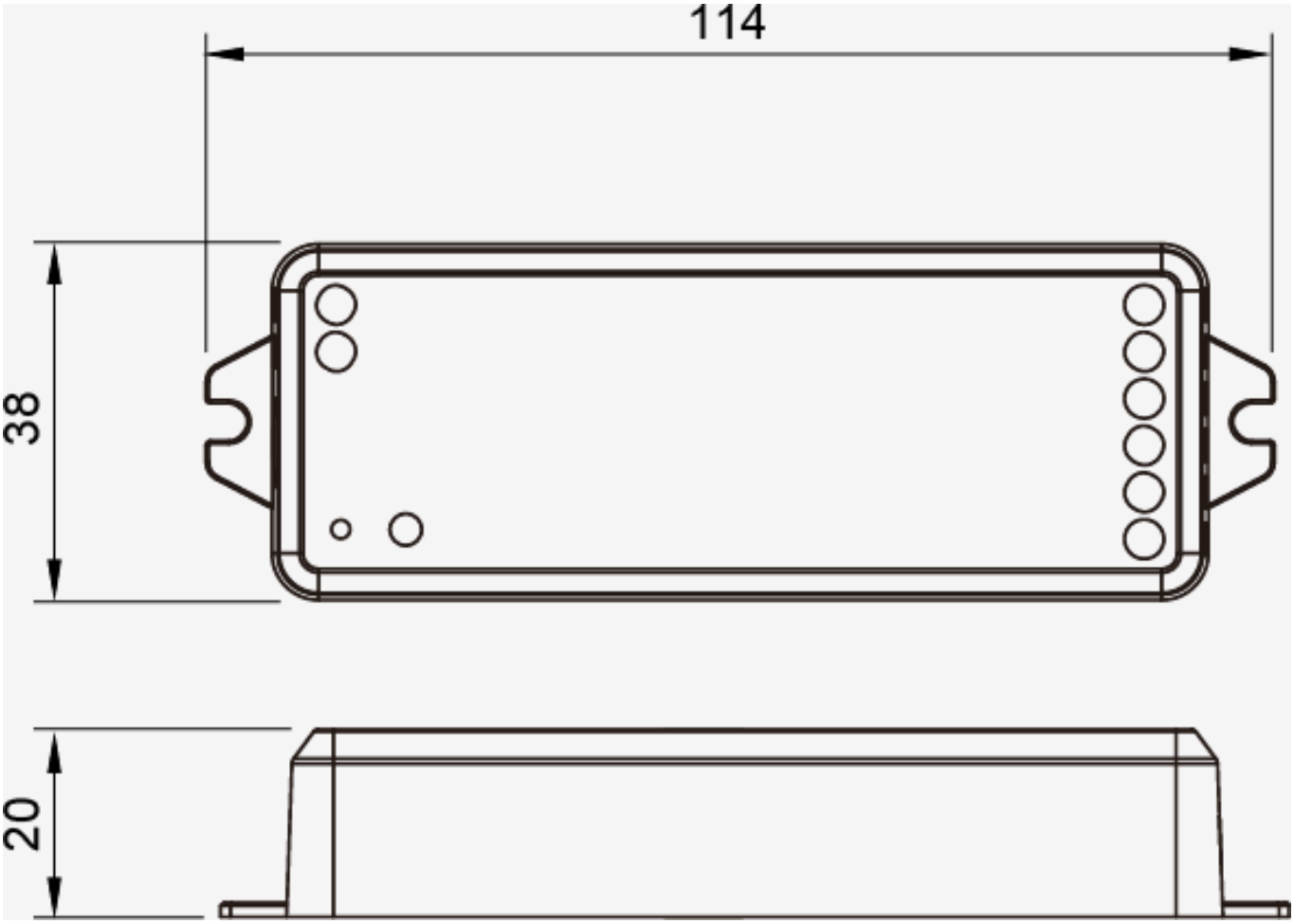

Packaging Data			
Fixings Included:	yes	**Packaging Height:**	43mm
Packaging Length:	120mm	**Packaging Width:**	27mm
Packaging Weight:	66g		

Disclaimer

Tagra Lighting have taken reasonable care to ensure that the information in this datasheet is accurate at time of publication however it should be noted that all specifications are subject to tolerance. Descriptive specifications such as colour are subjective. Tagra Lighting reserve the right to update specifications without notice. The information in the datasheet may only be relied on by customers of Tagra Lighting in accordance with applicable terms and conditions.

Tagra Lighting is a trading name of T.R Ventures Limited, a company incorporated in England with registered number 07757720. Our registered office is Unit 2, Southfield Industrial Estate, Trafford Park, M17 1SJ.

www.tagra-lighting.co.uk

