Precautions

IMPORTANT

- Please read these instructions carefully before commencing any work.
- Please retain these instructions for future reference.
- Please refer to product listing for detailed information.

Installation Notes

- Install in accordance with the IEE wiring regulations and building regulations.
- This product must be installed by a suitably competent person.

Electrical

- Switch the power off at the mains supply before installing or maintaining the unit.
- Ensure others cannot restore the electrical power supply without your knowledge.
- Only install compatible constant voltage LED fixtures and controls. 48V products should be used with a 48V driver. Contact technical support or visit the product page for compatible products.
- Connect products with correct polarity. The positive cable (+) should be connected to the positive terminal on the driver. The negative cable (-) should be connected to the negative terminal on the driver.
- Ensure that the power capacity of the LED driver is greater than the total load of all the connected products.
- Ensure appropriate cables are installed between driver, fixtures, and any controllers. When choosing cable, factor in voltage drop, current rating and type. Inadequate cables could overheat and cause a fire.
- The maximum length of output cable to the light source should not exceed 2 metres to meet EMC standard.
- Do not install if the product has visible damage.
- Do not open, modify, or repair the unit. No user-serviceable parts inside.
- This is a Class II product: no earth connection is required.
- Ensure input voltage matches rating on device label.
- Maintain a clearance of 50mm around the unit.
- Connect AC mains to input terminals (L/N). No earth is required.
- Do not short-circuit the output.

Mechanical

- The unit will generate heat during use. Do not cover with insulation or place near flammable materials.
- Secure unit to a solid surface using fixing points with adequate ventilation.
- Protect the driver from mechanical damage. Take care not to dislodge any components during installation. Ensure that cables connected to the driver cannot be pulled and are secured to provide strain relief.

Environmental

- IP20 drivers are not waterproof and can only be installed indoors.
- IP66 drivers are suitable for indoor and sheltered outdoor installation.
- IP67 drivers are suitable for indoor and outdoor installation.
- Install in a location without chemicals like sulphur, acid and halogen present.
- Avoid direct exposure to sunlight and protect cables from UV rays with suitable silicone sheath.

Product Warranty

1. A warranty period is provided for products in normal use. For any faults arising during the period that are confirmed to be quality related by inspection by the company, a product of the same specification will be replaced for free.
2. The warranty does not cover any of the following:

   (1) Any product damage due to usage not allowed in the instructions.
   (2) Any product damage due to disassembling or wrong operation by the user.
   (3) Severe appearence damage or deformation of the product.

CLASS II

tagra®

Non-Dimmable LED Drivers

▸ 48V Constant Voltage

User Manual

WARNING
Shock hazard. May result in serious injury or death. Isolate supply before installation. Complete electrical safety checks before comissioning. Inspect regularly in accordance with local regulations

WARNING
Risk of fire. Ensure correct cable sizing, over-current protection, ventilation and keep away from combustible materials.

	INPUT		OUTPUT							
SKU	Voltage	Current	Voltage	Current	Power	PF	Eff.	Ta (Max)	Tc (Max)	IP
TAG48V120W	220-240V AC	0.7A	48V DC	0-2.5A	0-120W	0.95	90%	45°C	85°C	20

v1

Mounting Location

Plan View

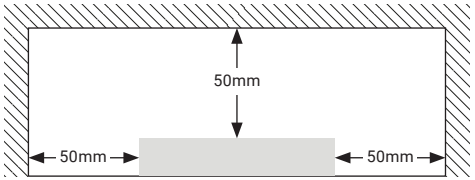

Top View

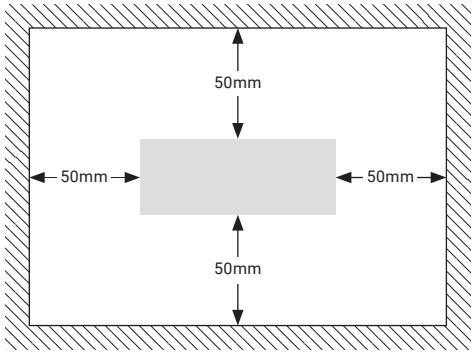

WARNING:
The unit will generate heat during use. Do not cover with insulation or place near flammable materials.

Wiring Diagram

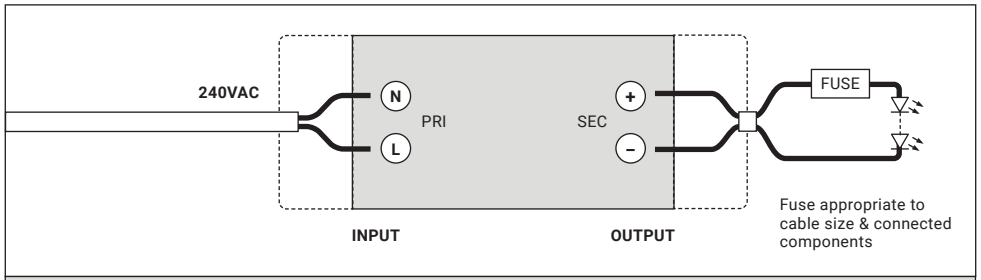

Applies to SKU Codes:				
TAG48V120W				

Installation

Refer to the “Electrical” section listed in the precautions.
Ensure all components compatible. Configure and pre-test system prior to permanent installation.

1. Unscrew and remove the covers from the unit (were applicable).
2. Connect AC mains to input (PRI) terminals. No earth is required. Check voltage and polarity.
3. Connect LED system on the output (SEC) terminals. Check voltage and polarity.
4. Do not cover with insulation or place near flammable materials.
5. Secure unit to a solid surface using fixing points with adequate ventilation.
6. Maintain a clearance of 50mm around the unit.
7. Replace the covers and screw down ensuring cables are firmly clamped.
8. Complete electrical safety checks.

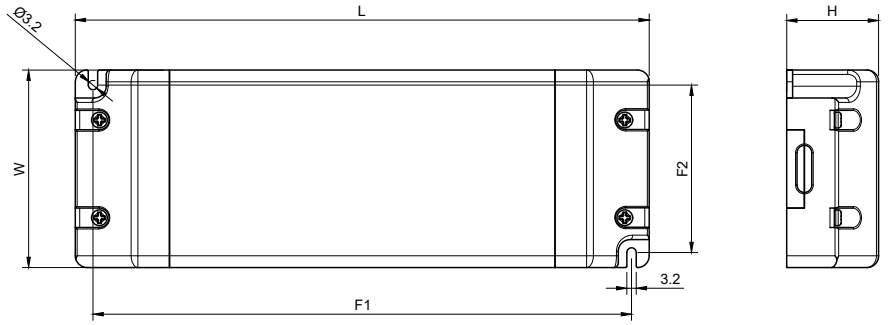

SKU	Length	Width	Height	Mounting Points (F1 x F2)
TAG48V120W	316mm	44.9mm	33mm	302.8mm x 34.3mm