User Manual

SYNDEO
by tagra®

Slimline | Plug & Play | LED Driver

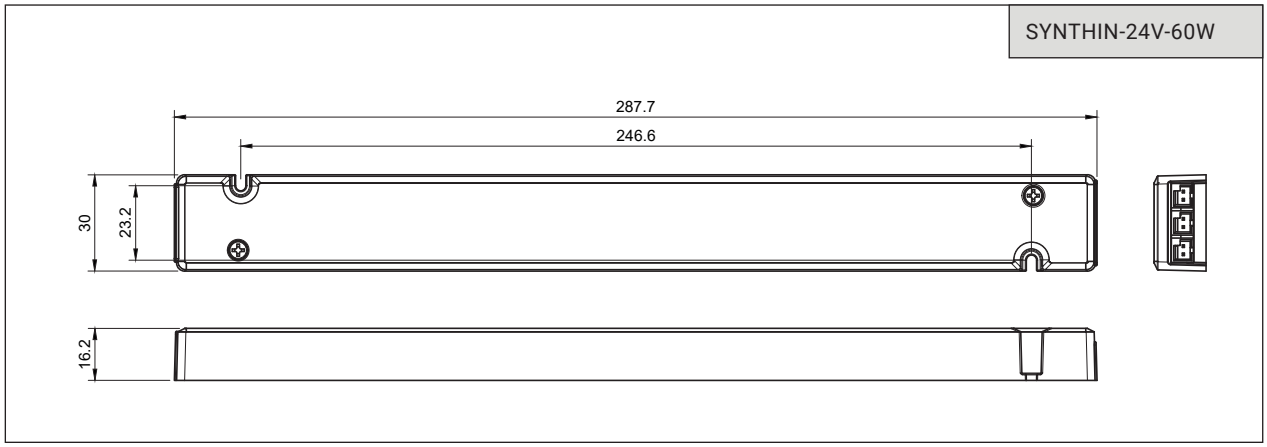

IMPORTANT INFORMATION

- Please read these instructions carefully before installation or operation.
- Retain this manual for future reference.
- Please refer to product listing for detailed information.
- This product must be installed by a suitably competent person.
- This product should be installed in accordance with local IEE wiring regulations and building regulations.
- Remove product from packaging.
- Fully uncoil all cables.
- Ensure mains supply is disconnected before installation.
- Ensure others cannot restore the electrical power supply without your knowledge.
- Do not open, modify, or repair the unit. No user-serviceable parts inside.

SAFETY PRECAUTIONS

- Please read these instructions carefully before installation or operation.
- This product must be installed by a suitably competent person.
- Ensure mains supply is disconnected before installation.
- Ensure others cannot restore the electrical power supply without your knowledge.
- Do not install or use the product if it is damaged.
- For indoor use only.
- Use only with compatible Syndeo products.
- Allow adequate ventilation around the luminaire.

ELECTRICAL

- Switch the power off at the mains supply before installing or maintaining this fitting.
- Ensure others cannot restore the electrical power supply without your knowledge.
- Only install compatible constant voltage LED fixtures and controls. 12V products should be used with a 12V driver and 24V products should be used with a 24V driver. Contact technical support or visit the product page for compatible products.
- Ensure that the power capacity of the LED driver is greater than the total load of all the connected products.
- Do not overload the power supply.
- The maximum length of output cable to the light source should not exceed 3.5 metres.
- Use only with an approved Syndeo mains lead.
- Do not install if the product has visible damage.
- Do not modify or disassemble the product beyond instructions or the warranty will be void.

MECHANICAL

- The driver will generate heat during use. It should be installed in a well ventilated location free from explosive gases and vapours and mounted to a surface that will dissipate this heat i.e. metal, not wood or plastic.
- The driver should be fixed to a surface using fixing points.
- Protect the driver from mechanical damage. Take care not to dislodge any components during installation. Ensure that cables connected to the driver cannot be pulled and are secured to provide strain relief.
- Do not over tighten screws when mounting the driver.

ENVIRONMENTAL

- IP20 drivers are not waterproof and can only be installed indoors.
- Keep away from moisture and only use in dry locations.
- Install in a location without chemicals like sulphur, acid and halogen present.
- Avoid direct exposure to sunlight and protect cables from UV rays with suitable silicone sheath.

MAINTENANCE

- Before cleaning or maintenance, ensure the power supply is disconnected from the mains.
- Clean only with a dry, soft cloth.
- Do not use chemical cleaners or solvents.
- Do not open, modify, or repair the unit. No user-serviceable parts inside.

DISPOSAL & RECYCLING

- This product must not be disposed of with household waste.
- Please return to an authorised recycling facility in accordance with local environmental regulations.

PRODUCT WARRANTY

1. A warranty period is provided for products in normal use. For any faults arising during the period that are confirmed to be quality related by inspection by the company, a product of the same specification will be replaced for free.
2. The warranty does not cover any of the following:
    1. Any product damage due to usage not allowed in the instructions.
    2. Any product damage due to disassembling or wrong operation by the user.
    3. Severe appearance damage or deformation of the product.

MOUNTING

Plan View

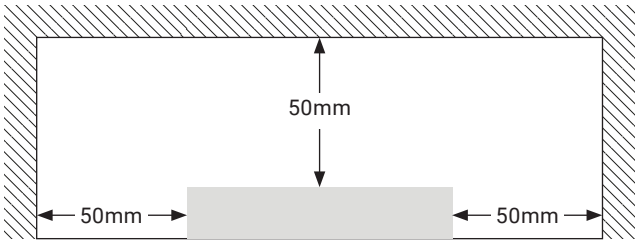

Top View

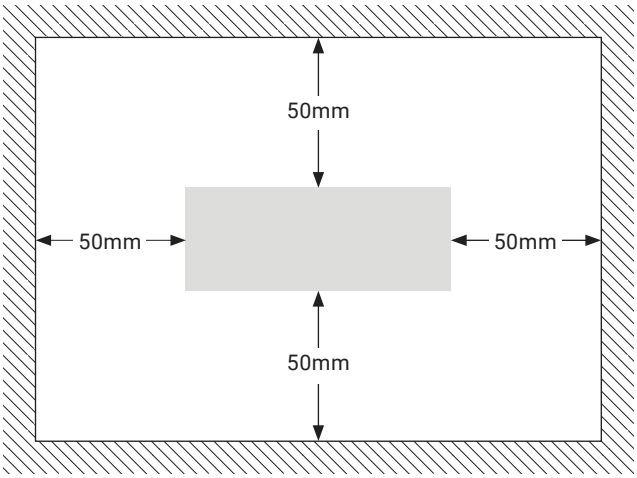

WARNING:

- The unit will generate heat during use.
- Do not cover with insulation or place near flammable materials.

INPUT & OUTPUT

