12V EASY TO USE LED TAPE KIT, COOL WHITE 6000K, 60 LEDS P/M, IP20 (5 METRES)

| SKU: SKIT-2835CW605

IP20 | 6000 K | 12V | CE EMC | CE LVD | RoHs | 3YR Guarantee

TECHNICAL INFORMATION

Tape Specifications

SKU Code	SKIT-2835CW605
Voltage	12V
Watts p/M	4.8W p/M
No. of LEDs p/M	60 LEDs
Current	0.4A p/M | 2A p/5M
Colour Temp	6000K
IP Rating	IP20
Lumens p/M	600LM
Lumens p/W	100LM
LED Chip Type	2835
LED Chip Size	2.8mm x 3.5mm
Beam Angle	120°
CRI	>80
PCB Width	8mm
PCB Thickness	1.2mm
Cut Points	Every 5cm
Operating Temp	-20°C to 60°C
Average Lifespan	Upto 25000 Hours
Certification	CE-EMC CE-LVD RoHs
Guarantee	3 Years

Driver Specifications

Input Voltage	AC100-265V
Input Current	AC220V/0.2A
Inrush Current	<20A
Surge Protection	1000V
Short Circuit Protection	Yes
Over Voltage Protection	Yes
Power Factor	PF≥ 0.5
Output Current	2A
Wattage	24 Watts
Voltage	12 Volts
Working Temp	-15°C to 45°C
Efficiency	>80%
IP Rating	IP20
Dimensions	137 x 43 x 15mm
Certification	CCC/TUV-CE/CB
Safety Standards	EN5022/ EN55015:2013/ A1:2015
Weight	219g

ULTRA LEDS

ultraleds.co.uk

0800 088 3300

orders@ultraleds.co.uk

FEATURES & BENEFITS

- Solderless circuit connection
- No need for an Electrician
- Plug + Play strip lighting solution
- Compatible with Syndeo sensors and dimmers for solderless controllable strip lighting
- Driver contains a fuse to assist with BS7671 Regulation

DESCRIPTION

This all in one tape kit is designed to provide a professional level easy to use strip lighting solution by utilising the Syndeo Connection System. This tape comes with solderless components ready connect to get your circuit up and running with minimal hassle and installation time.

This kit includes:

1 x 30W 12V Syndeo Plug and Play Driver
1 x 5 Metre Reel of Warm White LED Tape, 60 LEDs per metre.
5 x Cable to Tape Connection Adaptors
5 x 1500mm Syndeo 8mm Tinned End Cables

This tape can also be made to Dim or turn On/Off with the use of any of our Syndeo Plug and Play dimmers and controllers.

Please Note: A Maximum single run of up to 5 metres can be achieved with the supplied LED tape before visible voltage drops occur.

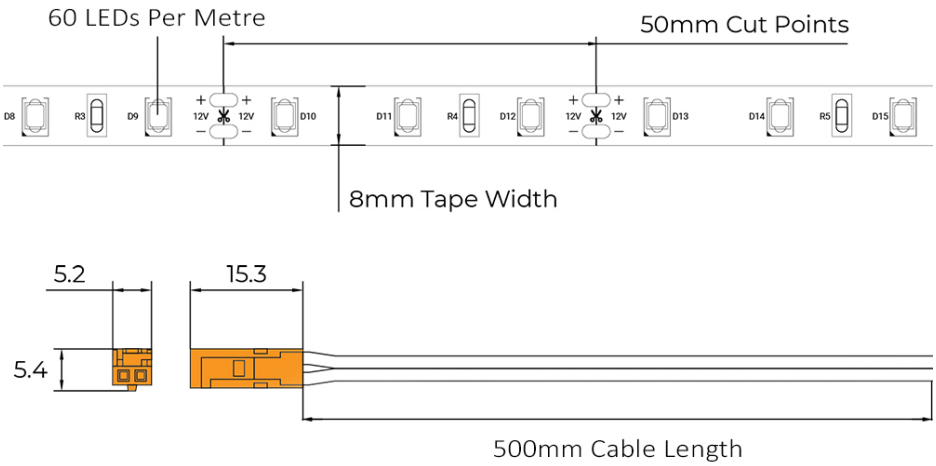

TAPE DIAGRAM

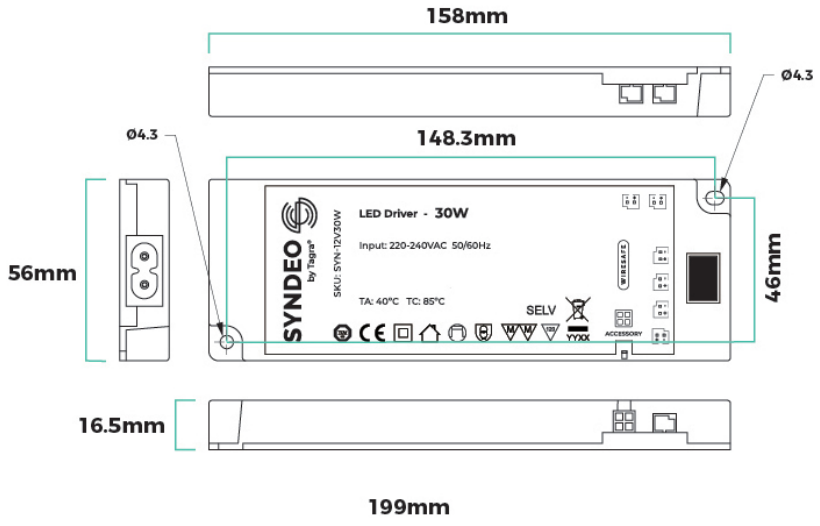

DRIVER DIAGRAM

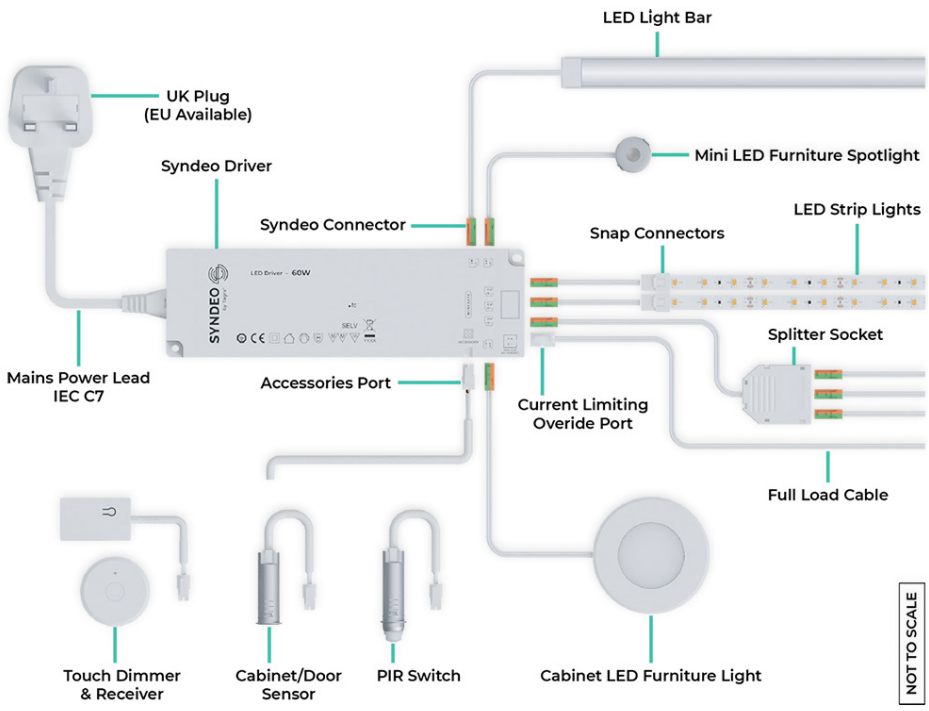

CONNECTION DIAGRAM